Low-Level Protocol

for TopCon Device/TFE/SAS

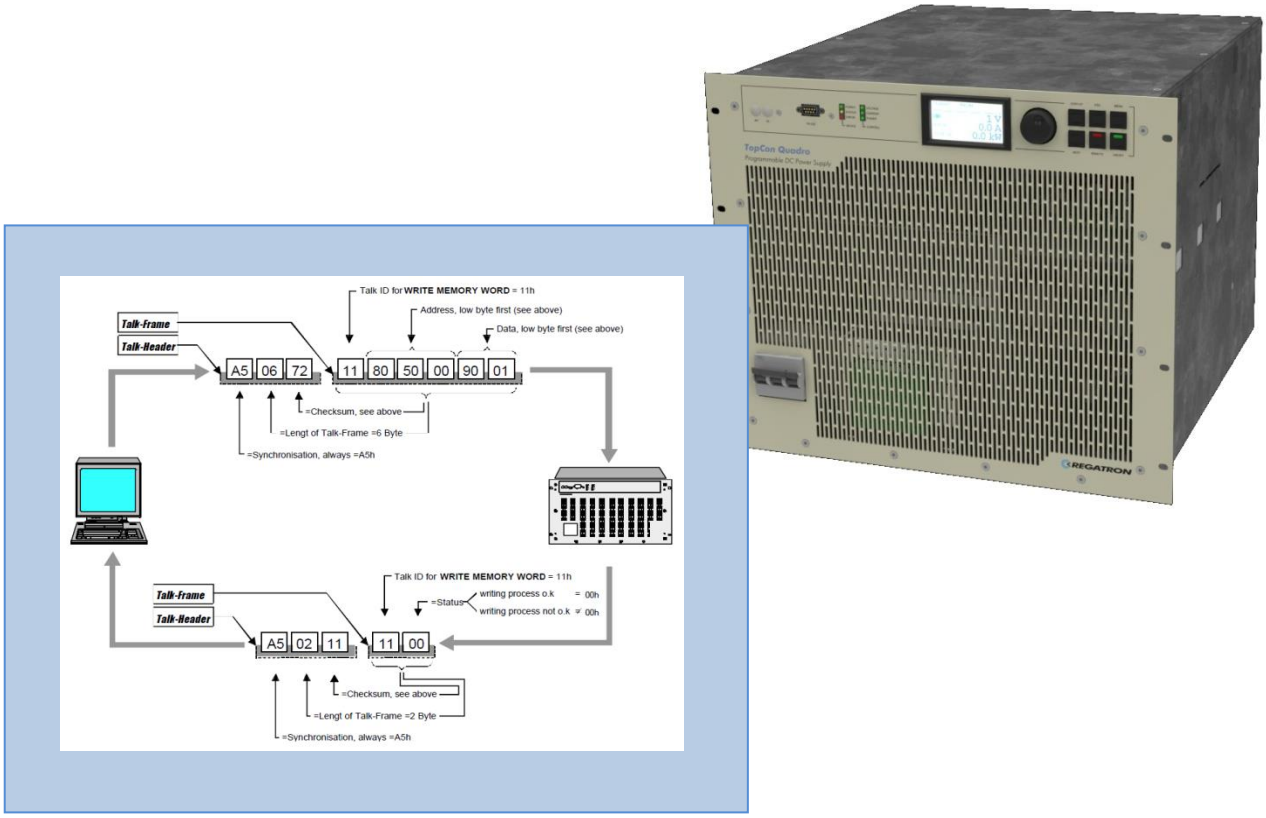

Manual

Version V0.2.16

Regatron AG
Feldmuehlestrasse 50
CH-9400 Rorschach
Tel +41 71 846 67 44
Fax +41 71 846 67 77
www.regatron.com
topcon@regatron.ch

General information

This information in this documentation corresponds to the development situation at the time of going to print and is therefore not of a binding nature. Regatron AG reserves the right to make changes at any time for the purpose of technical progress or product improvement, without stating the reasons. In general we refer to the applicable issue of our “Terms of delivery”.

Identification

Manufacturer

Information on the manufacturer	
Regatron AG	Tel. +41 71 846 67 44
Feldmuehlestrasse 50	Fax +41 71 846 67 77
9400 Rorschach	www.regatron.com
SWITZERLAND	topcon@regatron.ch

Tab. 1

Instructions

Version overview	
Manual	**Low-Level Protocol;** DO6130.051
For following software-module:	
TopCon Main Firmware	From version V4.1x.xx / V4.2x.xx

Tab. 2

Hazard and warning information	
Pictogram	**Meaning**
DANGER	For an immediate hazard that will result in serious injuries or fatality.
WARNING	For an immediate hazard that can result in serious injuries or fatality.
CAUTION	For a possibly hazardous situation that can result in serious injuries or fatality.
CAUTION	For a possibly hazardous situation that could result in damage to the product or another item in its surroundings.

Tab. 3 Basic hazard and warning information

Further warning and hazard information	
Pictogram	**Meaning**
	DANGER, WARNING or CAUTION due to electrical power

Tab. 4 Symbols included in the table can be used for more specific depiction of warning information from Tab. 3 "Basic hazard and warning information".

Instructions	
Pictogram	**Meaning**
	Important information

Tab. 5 Mandatory signs that is important for the operation of the device or the software

General notes	
Pictogram	**Meaning**
	Tip, for working efficiently with the device

Tab. 6 Additional information, so that you can find possibly important information quickly.

Open questions

In you have any questions, your TopCon sales partner will be pleased to be of assistance.

However, you can also reach Regatron support at the following address:

Customer support	
Regatron AG	Tel. +41 71 846 67 44
Feldmuehlestrasse 50	Fax +41 71 846 67 77
9400 Rorschach	www.regatron.com
SWITZERLAND	tc.support@regatron.ch

Tab.7 Customer support

TABLE OF CONTENTS

1. Introduction - Low-Level Protocol (LLP)

1.1. Purpose of this document

This introduction is based on chapters 7 and 8 from the old TopCon Manual 4.20 (engl. / german). Those topics are not anymore covered in TopCon manual v4.50 (published in July 2011) due to the low importance of the LLP for most users. As it was decided to keep the information available for special user groups, this document was created.

This document is not covering all aspects of the LLP. In case that the user needs further functionality, feel free to ask the TopCon support for assistance.

It is enhanced with further content on user request. Therefore do not hesitate to ask tc.support@regatron.ch for further function descriptions in case you need currently undocumented functionality.

1.2. Usage of the Low-Level Protocol

Commonly the use of the Low-Level Protocol is not encouraged if it is possible to use any other of the high level protocols to communicate with the TopCon. The commonly recommended protocol is the RS-232 based protocol using the TopCon Input / Output Library (TCIO.DLL). This higher level protocol requires a Windows-based PC (or Linux based) as controlling entity.

Using such high-level API on the controlling side allows to prevent several problems that occur when using the LLP. One can imagine that transforming commands into the integer arithmetics (e.g. voltage = 2000_{10} == 50% max Voltage) in the TopCon device poses problems compared to simply saying: U_{Ref} = 300Volts.

Nevertheless there are some situations when it is indicated to use the LLP. Such situations are for example:

- Using a PLC for controlling the TopCon device.
- Using arbitrary interface busses that are not supported by the TopCon option cards (but when having a Bus-to-RS232 interface).
- The user needs the protocol with the lowest overhead and is capable of providing the various LLP commands on his own.

In these cases it is necessary to have access to the simple LLP protocol. Data is sent (received) in a very efficient manner to (from) the TopCon and this allows to control the TopCon.

1.3. General overview of the protocol

The communication over the RS-232 runs on a proprietary protocol with the following properties:

- length and checksum coding for every frame
- address length 3 byte (24 bit)

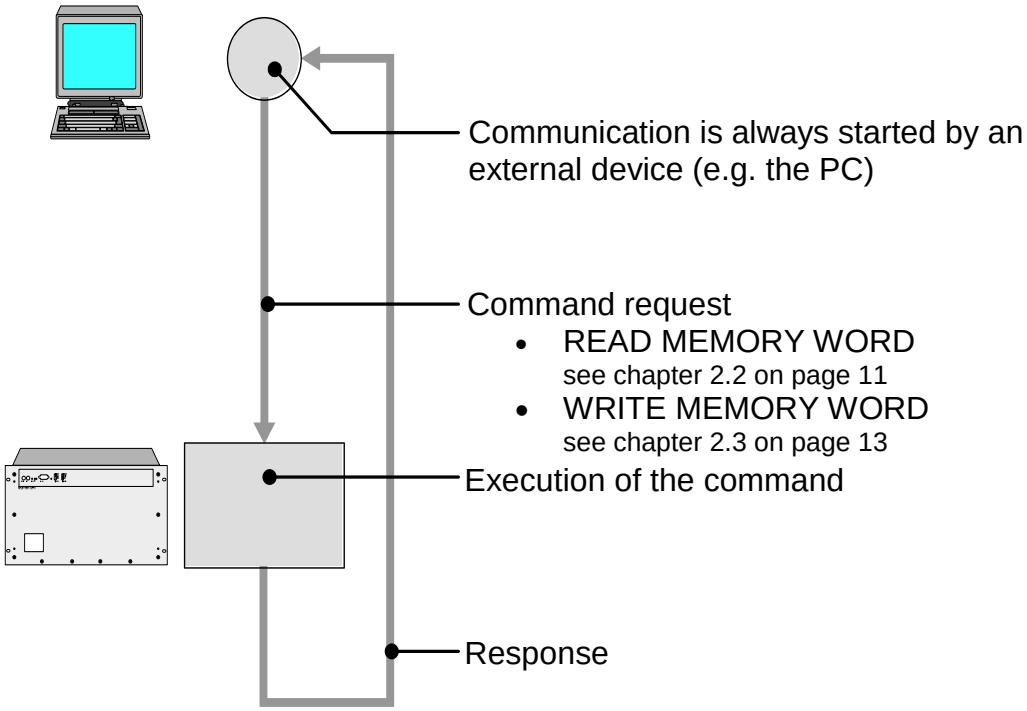

Each transmission packet consists of:

- Talk-Header, fix length, 3 Byte
- Talk-Frame, variable length

Whether a retry takes place or not in case of an error (checksum fail or "not ok" response) depends on the external device (e.g. the PC) or respectively from its control program.

The “Communication Errorcodes” relates to explanations in chapter 2.4 on page 15.

2. TopCon functionality by RS232 / RS422

2.1. Abbreviations

2.1.1. R / W – Read / Write

The physical value denoted can be read (R) and/or be written (W). Reading an address that is marked as (only) W, can result in undefined values. Writing to an address being marked as R is not allowed.

2.2. READ MEMORY WORD - Example

In this example the actual current value should be read through RS232. The TopCon power supply unit has the following output values:

Output values

- Unom = 100 V
- Imax = 125 A
- **Iact = 87.5 A**

Actual output current reading

- **Address: 0x005085** (low byte first: 0x855000 → 0x005085)
- Value range 0 ... 4000 $_{10}$
- The TopCon answers to the actual current (Iact) reading request with the value **0AF0 $_{hex}$ = 2800 $_{10}$**. (low byte first: F00A $_{hex}$ → 0AF0 $_{hex}$)
  In this example **2800 $_{10}$** corresponds to a current of **87.5 A**
  (4000 $_{10}$ ≙ 125A)

Remarks

- For the instruction **READ MEMORY WORD**
  the **Talk ID** must be set **10 $_{hex}$**
- The checksum corresponds to the sum of all the bytes in the talk frame, modulo 100 $_{hex}$

Example

Checksum = (**10 $_{hex}$** + **85 $_{hex}$** + **50 $_{hex}$** + **00 $_{hex}$**) Modulo 100 $_{hex}$

Checksum = E5 $_{hex}$ Modulo 100 $_{hex}$

Checksum = E5 $_{hex}$

2.2.1. Communication sequence over the RS-232 interface

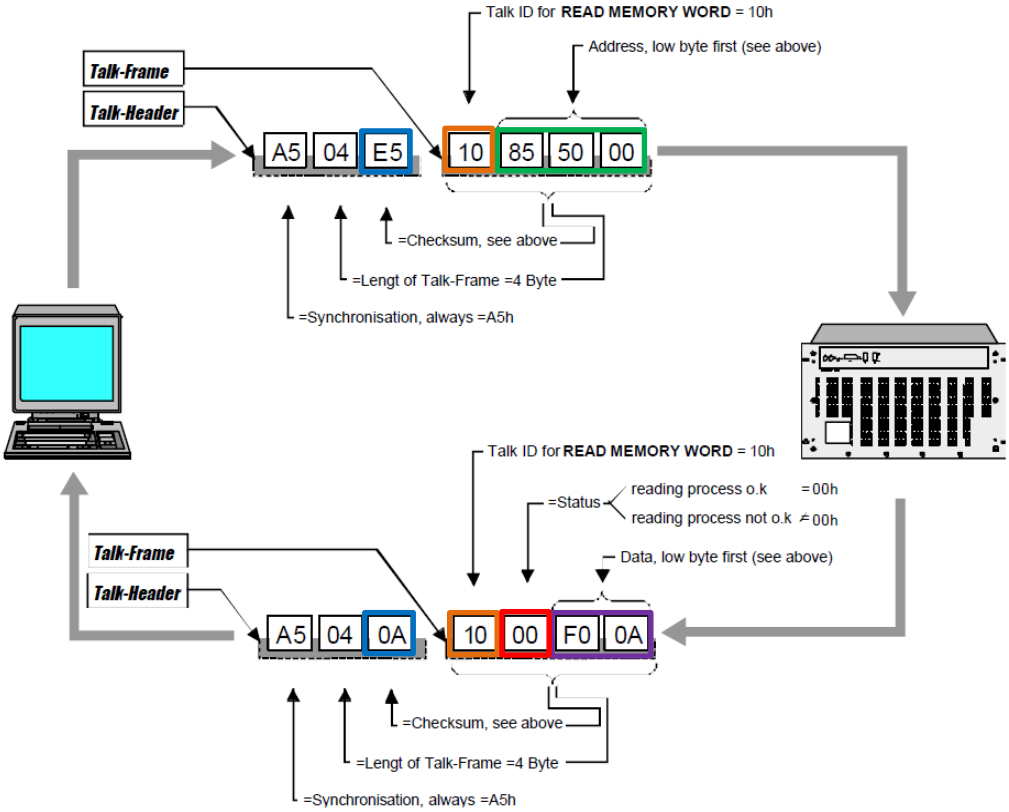

Fig. 1 Communication sequence over the RS-232 interface

Checksum = (**10** $_{hex}$ + **00** $_{hex}$ + **F0** $_{hex}$ + **0A** $_{hex}$) Modulo 100 $_{hex}$

Checksum = 10A $_{hex}$ Modulo 100 $_{hex}$

Checksum = 0A $_{hex}$

The **status (communication errorcode)** relates to explanations in chapter 2.4 on page 15.

2.3. WRITE MEMORY WORD - Example

As these commands all write directly to firmware memory (RAM) be careful to enter the correct register und data values. Do not write to undocumented registers!

In this example the voltage set value should be set through RS232 to 10 V. The TopCon power supply unit has the following output values.

Output values

- Unom = 100 V
- Imax = 125 A
- **Uset = 10 V**

Voltage set value setting

- **Address: 0x005080** (low byte first: 0x855000 → 0x005085)
- Value range 0 ... 4000 $_{10}$
- The TopCon sets a voltage (Uset) with the value **0190 $_{hex}$ = 400 $_{10}$** (low byte first: 9001 $_{hex}$ → 0190 $_{hex}$).
  In this example **400 $_{10}$** corresponds to a voltage of **10 V**
  (4000 $_{10}$ ≙ 100 V)

Remarks

- For the instruction **WRITE MEMORY WORD**
  the **Talk ID** must be set **11 $_{hex}$**.
- The checksum corresponds to the sum of all the bytes in the talk frame, modulo 100 $_{hex}$

Example

Checksum = (**11 $_{hex}$** +**80 $_{hex}$** + **50 $_{hex}$** + **00 $_{hex}$** + **90 $_{hex}$** + **01 $_{hex}$**) Modulo 100 $_{hex}$

Checksum = 172 $_{hex}$ Modulo 100 $_{hex}$

Checksum = 72 $_{hex}$

2.3.1. Communication sequence over the RS-232 interface

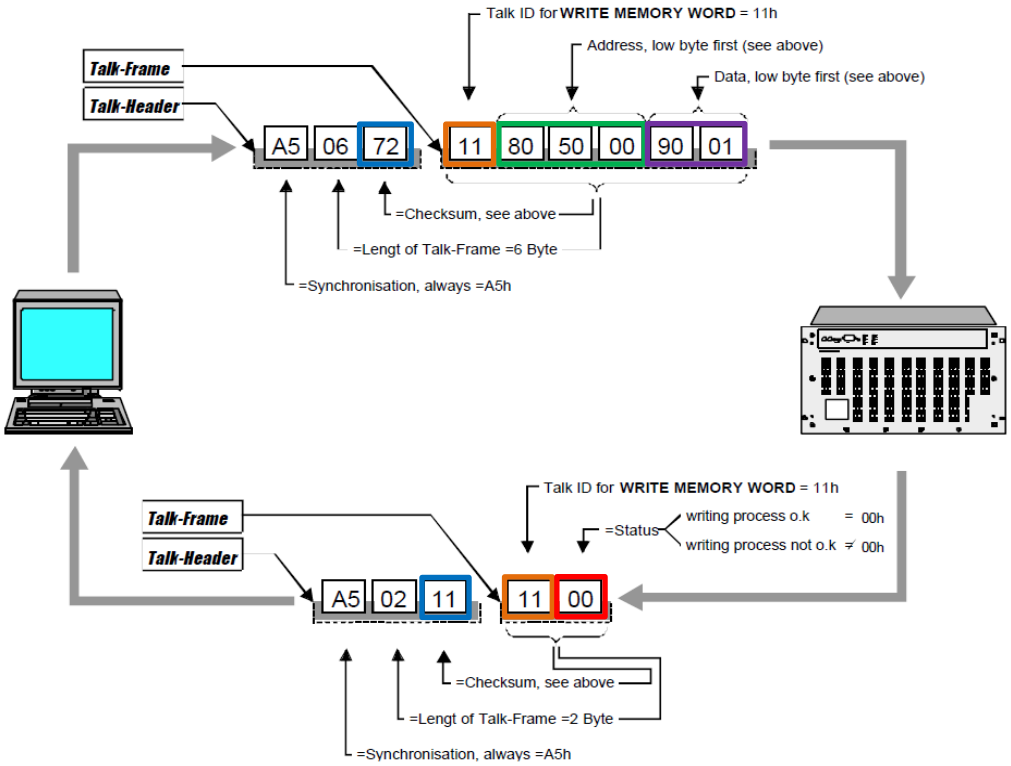

Fig. 2 Communication sequence over the RS-232 interface

Checksum = (11_{hex} + 00_{hex}) Modulo 100_{hex}

Checksum = 11_{hex} Modulo 100_{hex}

Checksum = 11_{hex}

The **status (Communication Errorcode)** relates to explanations in chapter 2.4 on page 15.

2.4. Communication Errorcodes

The 5th byte of the returned answer string is 0x00 or shows the device error if not 0x00. Further error codes might be implemented: on the occurrence in such cases, please refer to tc.support@regatron.ch for further assistance.

Value	Meaning
0x00	Command was executed correctly.
0xFF	Invalid check sum.
0xFE	Invalid / unknown protocol ID: The related command does not existing.
0xFD	Wrong frame size: The number of bytes is not expected for this command.
0xF3	Not supported protocol ID: Command is known, but not implemented.
0xF2	Error while writing to flash: Timeout or resulting value does not comply with written value.
0xF1	Range error: address is in invalid range.
0xF0	Flash not ready / flash busy: The Flash processes internal tasks and thus cannot accept further commands.
0xEF	Flash not erased: the command tried to write to a non-erased flash address.
0xEE	Address access violation: Read and/or write access to the demanded address is denied.
0xED	Device is not stopped (speciality of CTR4.x): Device must be in "STOP" mode for the flash to be programmed.
0xEC	Error during initialization of modulator update (speciality of CTR4.x)
0xEB	Value exceeds the valid range: attempt to write a non-valid value to the device.
0xEA	EEprom not ready: Reading or writing a value from EEProm failed as EEProm is busy (e.g. previous write cycle active).
0xE9	Default return value, if not defined differently. (Used for simpler exploration of non-initialized return parameters).
0xE8	Not supported access to a parameter.
0xE7	Attempt to read from a write-only parameter.
0xE6	Attempt to write to ta read-only parameter.
0xE5	Parameter not existing (invalid index).
0xE4	Incompatible general parameter: (e.g. if required number of bytes cannot be delivered within a parameter block transfer).
0xE3	General / internal problem related to parameter access.
0xE2	Invalid Sub-Index
0xE1	Value range of parameter exceeded (write access)
0xE0	Value of written parameter too high.
0xDF	Value of written parameter too low.
0xD9	(used by HMI v3.x and CTR v3): invalid attempt to clear flash while programm still running -> stop program execution first.

Value	Meaning
0x80	(specific error of CTR4.2x) IBC not ready. Occurs when RS232 interface on IBC is set to "local" and collides with access from the CTR4.2x.

Tab. 8 Communication Errorcodes

2.5. Definition Type

Definition Type		
Type	**Range**	**Condition**
UINT16	0 … 65535_{10}	
SINT16	-32768 … 32767_{10}	-32768 … 0_{10} Write the corrected value.

Tab. 9 Definition Type

2.5.1. Exposition of the types

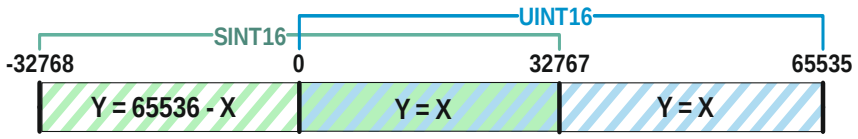

Fig. 3 Exposition of the types

X = the value you want to write and Y = the corrected value to write.

SINT16	X < 0	**Y = 65536 + X**
	X > 0	Y = X
UNIT16	X > 0	Y = X

Example - Calculation of a set value in Q4 mode

Principle

- X = -11357_{10}
- ↳ Y = 65536_{10} + (-11357_{10})
- ↳ **Y = 54179_{10}**
- ↳ Write **1101'0011'1010'0011** (54179_{10}) to the address

Values

- Inom Q4 = - 40 A
- **Iset = - 10 A**

Range

Value range 0 ... - 4000_{10} (- 4000_{10} ≙ - 40 A)

- In this example **- 1000_{10}** corresponds to a current of **- 10 A**

Calculation of the set value in Q4 mode

- **Iset =** 65536_{10} + (- 1000) = **64536_{10}**
- ↳ Write **1111'1100'0001'1000** (64536_{10}) to the address

3. CONTROL functionality

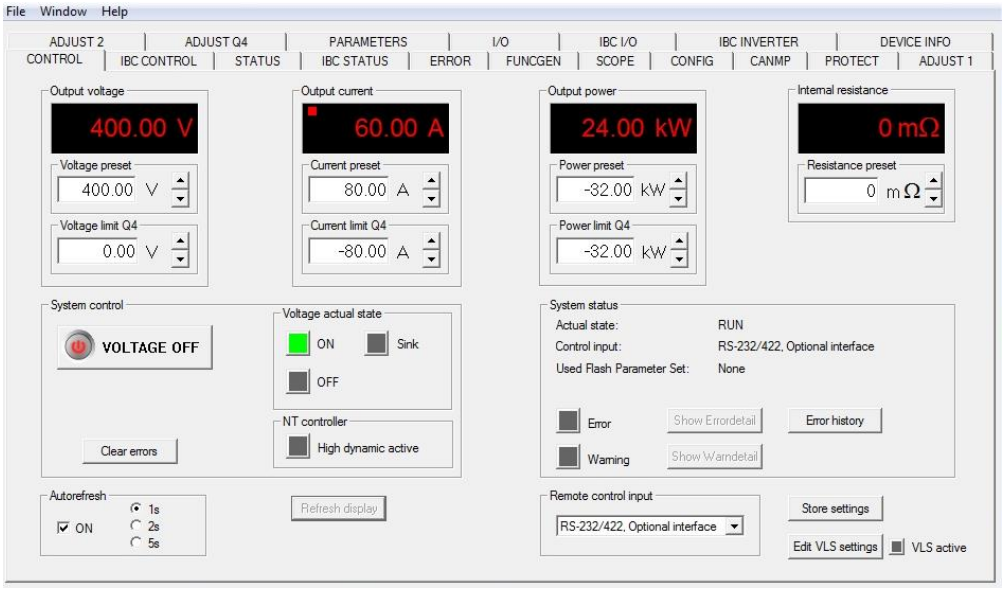

Fig. 4 Register CONTROL of TopControl

3.1. Remote Control Input

3.1.1. Definition of active interface

Definition of active interface			
Address	**R/W**	**Type**	**Condition**
0x005087	R/W	SINT16	Only settable on the master unit.
Possible values / meaning: 0: Analog/digital inputs 1: HMI 2: RS232 3: Internal (TC.MAC to Subsystem) 32767: passiv (no interface has the control)			

Tab. 10 RemoteControlInput – Definition of active interface

RemoteControlInput defines which interface is active. Values which can only be set if the RS232 is active have a corresponding remark (condition).

3.2. System control

3.2.1. Voltage ON / OFF

VoltageOn/OFF			
Address	**R/W**	**Type**	**Condition**
0x005089	W	UINT16	Only settable on the master unit. **RemoteControlInput** set to RS232.
Possible values / meaning: 0: output Voltage OFF 1: output Voltage ON Fore reading these values, check the value of the "state query" (see chapter 3.5 on page 22): "ready" = Voltage OFF, "run"=Voltage ON			

Tab. 11 Voltage ON

The power supply unit can be directly switched on and off with the control parameter Voltage On.

3.2.2. Clear errors and / or warnings

Clear errors and / or warnings			
Address	**R/W**	**Type**	**Condition**
0x00508B	W	UINT16	Only settable on the master unit. **RemoteControlInput** set to RS232.
Possible values / meaning: 1: Clear errors and / or warnings			

Tab. 12 Clear errors and / or warnings

With this instruction all errors and warnings can be cleared. In a multi-unit system the errors and warnings of all slave units will be cleared as well.

Exception

Errors from the Login and Configuration groups cannot be cleared with this instruction.

The power supply has to be switched off and on again with the main circuit breaker.

3.3. Save settings permanently

Store Settings			
Address	**R/W**	**Type**	**Condition**
0x00508A	W	UINT16	Only settable on the master unit.
Possible values / meaning: 1: Permanently save all settings in the non-volatile memory			

Tab. 13 Store Settings

3.4. ModuleSelectIndex - Define query range

ModuleSelectIndex			
Address	**R/W**	**Type**	**Condition**
0x0050D0	R/W	UINT16	Only settable on the master unit.
Possible values / meaning: 0: Query master values 1...63: Query slave values 64: Query system values			

Tab. 14 ModuleSelectIndex

Based on the **ModuleSelectIndex** setting the query through the master unit delivers the values of the master unit, of the corresponding slave unit or of the whole system:

- State query (chapter 3.5 on page 22)
- Actual value query (chapter 4.5 on page 34)
- Error groups query (chapter 10 on page 66)
- Warning groups query (chapter 11 on page 73)

On the slave unit and in case of single-unit operation the setting of the **ModuleSelectIndex** is of no importance. A query through a slave unit always delivers the value of this slave unit. After POWERUP the **ModuleSelectIndex** is set to 64.

In case that a connection of the master module to the PC software TopControl is established, it is possible that the **ModuleSelectIndex** is changed as well. It is recommended to reset the **ModuleSelectIndex** to the correct value to make sure that the queries return the correct values.

The slave number (1 … 63) required for the **ModuleSelectIndex** depends on the multi-unit operating mode and can be calculated with the values of the multi-unit ID selectors on the front panel according to the following formula:

If in the following text a correct **ModuleSelectIndex is demanded**, this is valid only for queries to the system master module.

3.4.1. Calculation of the ModuleSelectIndex from the module ID (AH, AL)

Multi-unit operating mode	Type	ModuleSelectIndex
Parallel or series operation	UINT16	(8 * AH) + AL
Multi-load operation	UINT16	(16 * AH) + AL

Tab. 15 Calculation of the ModuleSelectIndex

While being connected to a single module device, the **ModuleSelectIndex** of 0 or 64 respectively return the same query results.

3.5. Actual state query

ActualState			
Address	**R/W**	**Type**	**Condition**
0x00508C	R	UINT16	**ModuleSelectIndex** set correctly.
Possible values / meaning: Device / System is **Voltage OFF** 2: POWERUP 4: READY 12: ERROR 14: STOP Device / System is **Voltage ON** 8: RUN 10: WARN Further information on the system states to be found in the TopCon main manual.			

Tab. 16 ActualState

Depending on the setting of the **ModuleSelectIndex** this query delivers the state of the master unit, of a slave unit or of the system.

3.6. Actual control mode

ActualControlMode			
Address	**R/W**	**Type**	**Condition**
0x0050B8	R	UINT16	**ModuleSelectIndex** set correctly.
Possible values / meaning: 1: Constant Voltage (CV) 2: Constant Current (CC) 4: Constant Power (CP) 8: Usense limit active 16: Psense limit active 32: Current derating active *NOTE: In case of a combination of situations the sum of the respective value is given, e.g. meaning of 9: Constant Voltage (1) + Usense limit active (8)*			

Tab. 17 ActualControlMode

Depending on the setting of the **ModuleSelectIndex** this query delivers the information what controller is currently limiting the output.

3.7. Serial number

Serial number			
Address	**R/W**	**Type**	**Condition**
0x005128 (high)	R	UINT16	
0x005129 (low)	R	UINT16	

Possible values / meaning:

The firmware serial number consists of a 32Bit word, stored at the above mentioned addresses. Computing of the visible s/n (e.g. being used on device plate) needs replacing the numbers at position 4 and 5 with the letters shown below.

Transformation table:

1234 **AA** 001

0 → **A**
1 → B
2 → **C**
3 → D
4 → E
5 → F
6 → G
7 → H
8 → I
9 → J

Tab. 18 Serial number

3.7.1. Example

From firmware S/N to visible S/N

Values found in firmware:

1253 $_{10}$ @ 0x005128 (high), **6035** $_{10}$ @ 0x005129 (low)

Notice: For a CTR4.20 board
The value of the low part and the value of the high part of the firmware serial number have to be swapped.

The visible S/N is built by the formula

CharTransform (**High** * 65536 + **Low** $_{10}$)

= CharTransform (**1253** $_{10}$ * 65536 + **6035** $_{10}$)

= CharTransform (**821 22 643**)

= **0821-CC-643**

From visible S/N to firmware S/N

- Get the number from the identification plate or from TopControl

↳ [Reg.-Card: Device Info]:
e.g. 0821**CC**643

- Replace all letters with the matching digits (see above)

↳ **0821 22 643**

- Convert to Hex

↳ 04E51793

↳ split 2x16 Bits (lower 4 digits vs. remaining part)

↳ **0x04E5 (high), 0x1793 (low)**

Notice: For a CTR4.20 board
The value of the low part and the value of the high part of the firmware serial number have to be swapped.

- Reconvert to decimal

↳ 0x04E5 = **1253_{10}** (high, address: 0x005128)

↳ 0x1793 = **6035_{10}** (low, address: 0x005129)

A concrete implementation may benefit from exploiting integer division (DIV, MOD) commands or shift left/right operations.

3.8. Firmware version

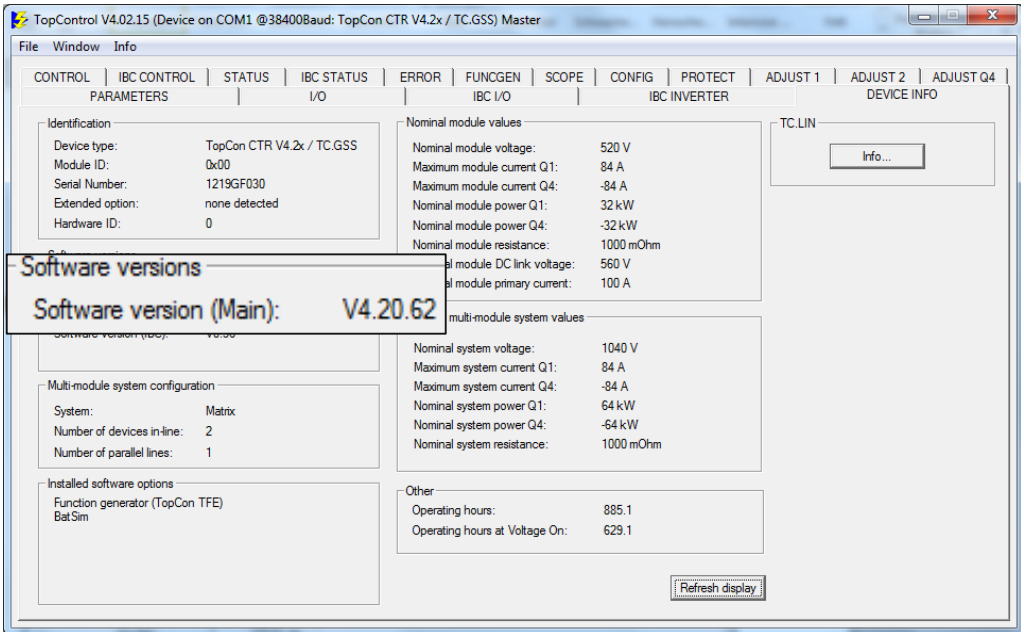

Fig. 5 Register DEVICE INFO – Firmware version

Firmware version			
Address	**R/W**	**Type**	**Condition**
0x007E01 (high)	R	UINT16	"Main"
0x007E02 (middle)	R	UINT16	"Version"
0x007E03 (low)	R	UINT16	"Revision"

Possible values / meaning:

Value range: 0 … 99_{10}

4.20.62

4: **"Main"**

20: **"Version"**

62: **"Revision"**

The firmware consists of three parts, e.g. "4.20.62". The related values are stored at three different storage cells and need to be combined to that string afterwards to be differing. (Hence in general it is not sufficient to only check the "version" for discrimination between V4.1x and V4.2x) as at a later point there might be a version 4.01.99 and one with number 5.01.99)

Tab. 19 Firmware version

4. Values

4.1. Definition of the maximums and minimums

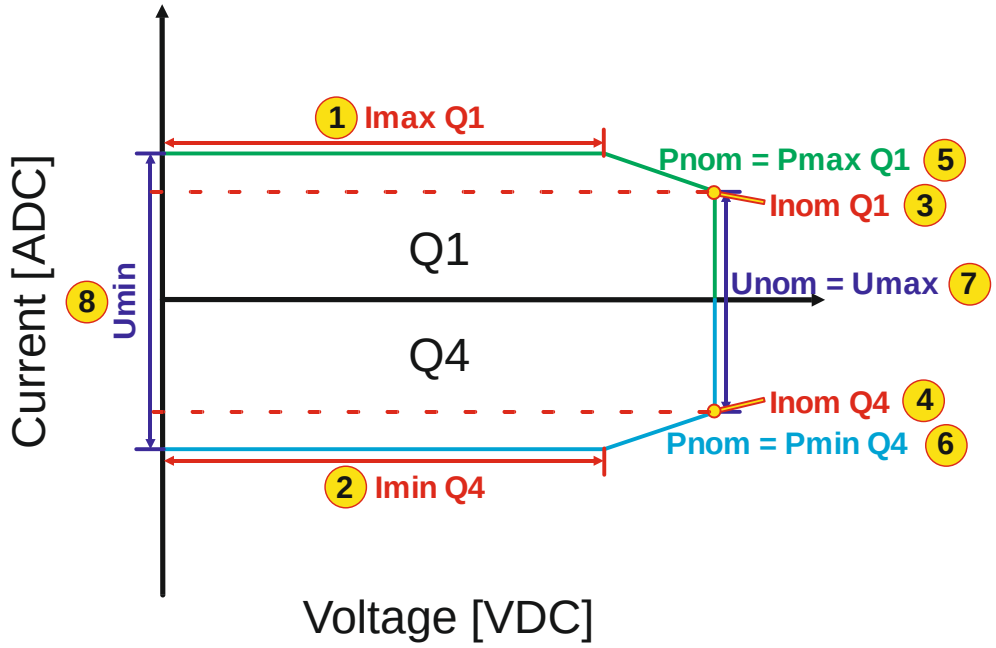

Fig. 6 Definition of the maximums and minimums

Definition of the maximums and minimums		
1	Maximum current (Q1)	
2	Minimum current (Q4)	
3	Nominal current (Q1)	
4	Nominal current (Q4)	
5	Maximum power (Q1)	= Nominal power (Q1)
6	Minimum power (Q4)	= Nominal power (Q4)
7	Maximum voltage	= Nominal voltage
8	Minimum voltage	

Tab. 20 Definition of the maximums and minimums

4.2. System values

The reader has to distinguish the system values (commonly used!) from the module values mentioned in the next chapter!

4.2.1. Maximum system voltage

Maximum System Voltage			
Address	**R/W**	**Type**	**Condition**
0x00510B	R	SINT16	**Actual State ≠ POWERUP** (see in chapter 3.5 on page 22)
Possible values / meaning: Maximum voltage of the connected system Value in [V]			

Tab. 21 Maximum System Voltage

4.2.2. Minimum system voltage

Minimum System Voltage			
Address	**R/W**	**Type**	**Condition**
0x005112	R	SINT16	**Actual State ≠ POWERUP** (see in chapter 3.5 on page 22)
Possible values / meaning: Minimum voltage of the connected system. Value in [V]			

Tab. 22 Minimum System Voltage

4.2.3. Maximum system current (Q1)

Maximum System Current (Q1)			
Address	**R/W**	**Type**	**Condition**
0x00510C	R	SINT16	**Actual State ≠ POWERUP** (see in chapter 3.5 on page 22)
Possible values / meaning: Nominal current of the system being connected to when working in standard mode (Q1). Value in [A]			

Tab. 23 Maximum System Current (Q1)

4.2.4. Minimum system current (Q4)

Minimum System Current (Q4)			
Address	**R/W**	**Type**	**Condition**
0x005113	R	SINT16	**Actual State ≠ POWERUP** (see in chapter 3.5 on page 22)
Possible values / meaning: Nominal current of the system being connected to when working in power feedback mode (Q4). Value in [A]			

Tab. 24 Minimum System Current (Q4)

4.2.5. Maximum system power (Q1)

Maximum System Power (Q1)			
Address	**R/W**	**Type**	**Condition**
0x00510D	R	SINT16	**Actual State ≠ POWERUP** (see in chapter 3.5 on page 22)
Possible values / meaning: Nominal power of the system being connected to when working in standard mode (Q1). Value in [kW]			

Tab. 25 Maximum System Power (Q1)

4.2.6. Minimum system power (Q4)

Minimum System Power (Q4)			
Address	**R/W**	**Type**	**Condition**
0x005114	R	SINT16	**Actual State ≠ POWERUP** (see in chapter 3.5 on page 22)
Possible values / meaning: Nominal power of the system being connected to when working in power feedback mode (Q4). Value in [kW]			

Tab. 26 Minimum System Power (Q4)

4.2.7. Nominal internal system resistance

Nominal internal system resistance			
Address	**R/W**	**Type**	**Condition**
0x00510E	R	SINT16	**Actual State ≠ POWERUP** (see in chapter 3.5 on page 22)
Possible values / meaning: Nominal value of the resistance of the connected system. Value in [mOhms]			

Tab. 27 Nominal internal system resistance

4.3. Module values

These limit values represent the limits of the TopCon **module** at hand. The reader has to distinguish the **system** values from those module values that are mentioned here. Commonly the values of this chapter are not used, instead the system limits are used as they represent the whole connected power system (chapter 4 on page 26).

For calculation the values of the Q4 values see chapter 2.5 on page 17.

4.3.1. Maximum module voltage

Maximum Module Voltage			
Address	**R/W**	**Type**	**Condition**
0x005100	R	SINT16	none
Possible values / meaning: Maximum voltage of the connected module. Value in [V]			

Tab. 28 Maximum Module Voltage

4.3.2. Minimum module voltage

Minimum Module Voltage			
Address	**R/W**	**Type**	**Condition**
0x00510F	R	SINT16	none
Possible values / meaning: Minimum voltage of the connected module. Value in [V]			

Tab. 29 Minimum Module Voltage

4.3.3. Maximum module current (Q1)

Maximum Module Current (Q1)			
Address	**R/W**	**Type**	**Condition**
0x005101	R	SINT16	none
Possible values / meaning: Maximum current of the connected module. Value in [A]			

Tab. 30 Maximum Module Current (Q1)

4.3.4. Minimum module current (Q4)

Minimum Module Current (Q4)			
Address	**R/W**	**Type**	**Condition**
0x005110	R	SINT16	none
Possible values / meaning: Minimum current of the connected module. Value in [A]			

Tab. 31 Minimum Module Current (Q4)

4.3.5. Maximum module power (Q1)

Maximum Module Power (Q1)			
Address	**R/W**	**Type**	**Condition**
0x005102	R	SINT16	none
Possible values / meaning: Maximum power of the module being connected to. Value in [kW]			

Tab. 32 Maximum Module Power (Q1)

4.3.6. Minimum module Power (Q4)

Minimum Module Power (Q4)			
Address	**R/W**	**Type**	**Condition**
0x005111	R	SINT16	none
Possible values / meaning: Minimum power of the connected module. Value in [kW]			

Tab. 33 Minimum Module Power (Q4)

4.3.7. Nominal internal module resistance

Nominal internal module resistance			
Address	**R/W**	**Type**	**Condition**
0x005103	R	SINT16	none
Possible values / meaning: Nominal internal resistance of the module being connected to. Value in [mOhms]			

Tab. 34 Nominal internal module resistance

4.4. Set values

The following values set the set values for voltage, current Q1, current Q4, power Q1, power Q4 and internal resistance.

4.4.1. Voltage Preset

Voltage preset (Q1)			
Address	**R/W**	**Type**	**Condition**
0x005080	R/W	SINT16	Write (W) possible only on the master unit. **RemoteControlInput** set to RS232. (see in chapter 3.1.1 on page 18)
Possible values / meaning: 0 … 4000_{10} (4000 corresponds to system nominal output voltage)			

Tab. 35 Voltage preset (Q1)

4.4.2. Voltage limit Q4

Voltage limit Q4			
Address	**R/W**	**Type**	**Condition**
0x30251F	R/W	SINT16	Write (W) possible only on the master unit. **RemoteControlInput** set to RS232. (see in chapter 3.1.1 on page 18)
Possible values / meaning: 0 … 4000_{10} (4000 corresponds to system nominal output voltage)			

Tab. 36 Voltage limit Q4

4.4.3. Current preset

Current preset (Q1)			
Address	**R/W**	**Type**	**Condition**
0x005081	R/W	SINT16	Write (W) possible only on the master unit. **RemoteControlInput** set to RS232. (see in chapter 3.1.1 on page 18)
Possible values / meaning: 0 … 4000_{10} (4000 corresponds to system maximum output current)			

Tab. 37 Current Preset (Q1)

4.4.4. Current limit Q4

Current limit Q4			
Address	**R/W**	**Type**	**Condition**
0x30251D	R/W	SINT16	Write (W) possible only on the master unit. **RemoteControlInput** set to RS232. (see in chapter 3.1.1 on page 18)
Possible values / meaning: -4000 … 0_{10} (-4000 corresponds to minimum system input current = Q4 mode)			

Tab. 38 Current limit Q4

4.4.5. Power preset (Q1)

Power preset (Q1)			
Address	**R/W**	**Type**	**Condition**
0x005082	R/W	SINT16	Write (W) possible only on the master unit. **RemoteControlInput** set to RS232. (see in chapter 3.1.1 on page 18)
Possible values / meaning: 0 … 4000_{10} (4000 corresponds to system nominal output power)			

Tab. 39 Power preset (Q1)

4.4.6. Power limit Q4

Power limit Q4			
Address	**R/W**	**Type**	**Condition**
0x30251E	R/W	SINT16	Write (W) possible only on the master unit. **RemoteControlInput** set to RS232. (see in chapter 3.1.1 on page 18)
Possible values / meaning: -4000 … 0_{10} (-4000 corresponds to minimum system input power = Q4 mode)			

Tab. 40 Power limit Q4

4.4.7. Resistance preset

Resistance preset			
Address	**R/W**	**Type**	**Condition**
0x005083	R/W	SINT16	Write (W) possible only on the master unit. **RemoteControlInput** set to RS232. (see in chapter 3.1.1 on page 18)
Possible values / meaning: 0 … 4000_{10} (4000 corresponds to nominal internal resistance)			

Tab. 41 Resistance preset

4.5. Actual values query

The actual values are scaled to match the corresponding set point values and can only be read.

Depending on the **ModuleSelectIndex** this query delivers the actual values of the master unit, one of the slave units or the whole system.

Notice: No actual value exists for the internal resistance RI, instead the internal resistance set value have to be read, according chapter 4.4.7, page 33.

4.5.1. Output voltage

ActualOutputVoltage			
Address	**R/W**	**Type**	**Condition**
0x005084	R	SINT16	**ModuleSelectIndex** correctly set. (see in chapter 3.4 on page 21)
Possible values / meaning: **ModuleSelectIndex** 0…63 4000 corresponds to module nominal output voltage. 64 4000 corresponds to system nominal output voltage.			

Tab. 42 Actual Output Voltage

4.5.2. Output current

ActualOutputCurrent			
Address	**R/W**	**Type**	**Condition**
0x005085	R	SINT16	**ModuleSelectIndex** correctly set. (see in chapter 3.4 on page 21)
Possible values / meaning: **ModuleSelectIndex** 0…63 4000 corresponds to module nominal output current. 64 4000 corresponds to system nominal output current. In Q4 mode: negative values are used (see in chapter 4 on page 26)			

Tab. 43 Actual Output Current

4.5.3. Output power

ActualOutputPower			
Address	**R/W**	**Type**	**Condition**
0x005086	R	SINT16	**ModuleSelectIndex** correctly set. (see in chapter 3.4 on page 21)
Possible values / meaning: **ModuleSelectIndex** 0…63 4000 corresponds to module nominal output power. 64 4000 corresponds to system nominal output power. In Q4 mode: negative values are used (see in chapter 4 on page 26)			

Tab. 44 Actual Output Power

4.5.4. Reading DC link voltage

Two different addresses are needed for the correct computation of the actual DC link voltage.

At first the nominal value of the DC link voltage has to be determined. It can be read at address **0x005105.** (In this example it is 560V).

This absolute voltage value corresponds with the nominal value of 4000_{10}.

On address **0x005012** the actual value can be read: in this case it is **4015_{10}**, what relates to an actual DCLink voltage of:

U_{DCLink} = 4015_{10} * (1/4000_{10} * 560V) = 562.1 Volts

4.5.4.1. DC link voltage nominal value

DC link voltage nominal value			
Address	**R/W**	**Type**	**Condition**
0x005105	R	SINT16	none
Possible values/ Meaning: Nominal value of the DC link voltage. The number is the voltage measured in [V] that corresponds with the number 4000_{10}.			

Tab. 45 DC link voltage nominal value

4.5.4.2. DC link voltage measured

DC link voltage value measured, normalized			
Address	**R/W**	**Type**	**Condition**
0x005012	R	SINT16	none
Possible values/ Meaning: Actual value of the DC link voltage, related to a value of 4000_{10}. 4000_{10} relates the voltage being given as DC link voltage nominal value (= memory address 0x005105).			

Tab. 46 DC link voltage measured value

4.6. Reading temperature values inside the TopCon device

There exist several temperature sensors inside the TopCon to check the actual temperature at various spots.
Such spots are: IGBT modules and rectifier temperature.

4.6.1. IGBT temperature

IGBT temperature			
Address	**R/W**	**Type**	**Condition**
0x005007	R	SINT16	none
Possible values/ Meaning: 0_{10}: 0 deg Celsius 4000_{10}: 25 deg Celsius Linear interpolation to negative and positive values.			

Tab. 47 IGBT temperature

4.6.2. Rectifier temperature

Rectifier temperature			
Address	**R/W**	**Type**	**Condition**
0x00500F	R	SINT16	none
Possible values/ Meaning: 0_{10}: 0 deg Celsius 4000_{10}: 25 deg Celsius Linear interpolation to negative and positive values.			

Tab. 48 Rectifier temperature

5. CONFIG functionality

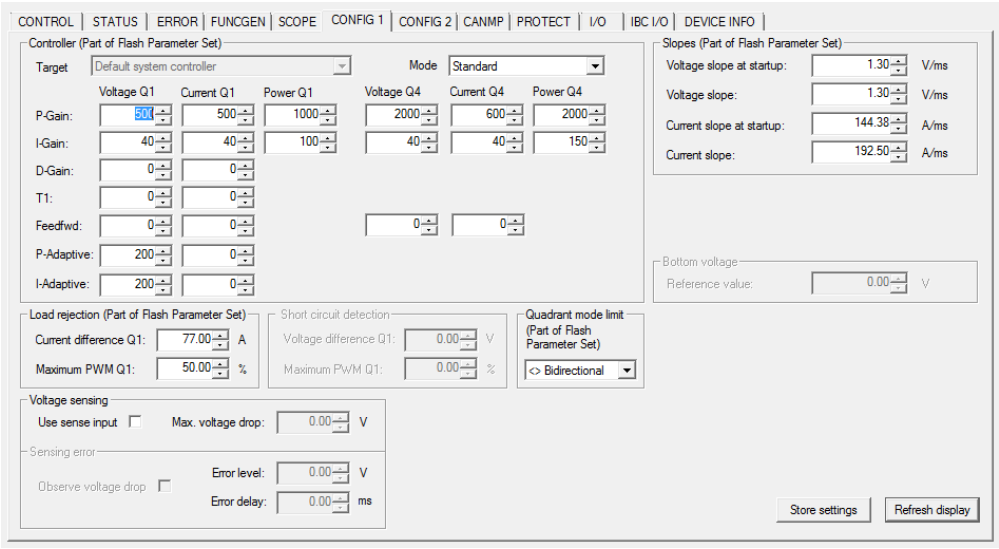

Fig. 7 Register CONFIG 1 of TopControl

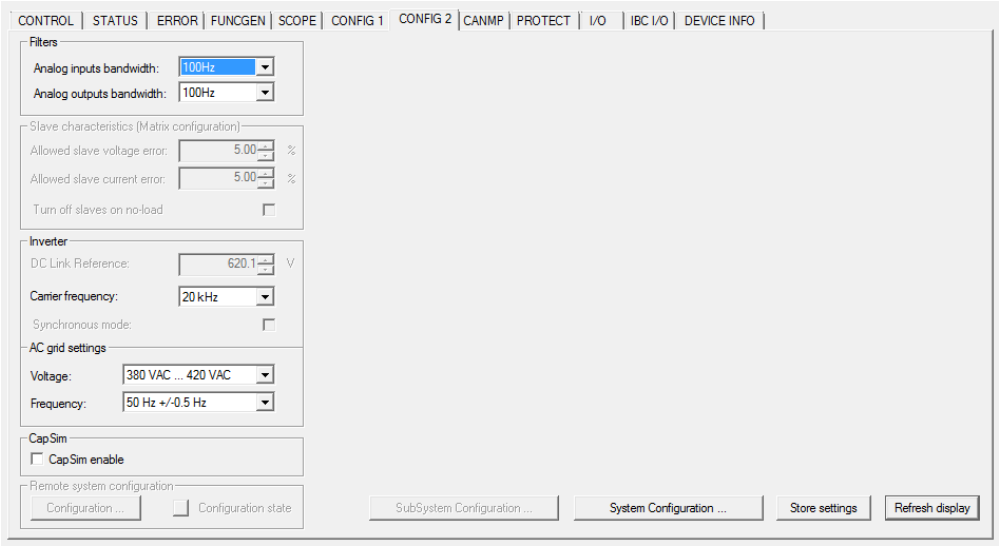

Fig. 8 Register CONFIG 2 of TopControl

5.1. Storing parameters permanently

When writing the values into the TopCon device, they affect the currently running actions. For changing the parameters permanently in the flash memory, the user presses the button [store settings]. The corresponding action is done by using the “Store settings” address with the following command.

5.1.1. Store settings

Store settings			
Address	**R/W**	**Type**	**Condition**
0x00508A	R/W	UINT16	none
Possible values/ Meaning: 0: Memory location is internally reset to 0 after having processed that command. 1: Writing 1 to this address initiates the storing process.			

Tab. 49 Store settings

5.2. System configuration

5.2.1. Multi-module system configuration TopCon

5.2.1.1. Number of devices in-line

Number of devices in-line			
Address	**R/W**	**Type**	**Condition**
0x0050D1	R/W	UINT16	Write (W) possible only on the master unit.
Possible values/ Meaning: 1 ... 8			

Tab. 50 Number of devices in-line

5.2.1.2. Number of parallel lines

Number of parallel lines			
Address	**R/W**	**Type**	**Condition**
0x0050D2	R/W	UINT16	Write (W) possible only on the master unit.
Possible values/ Meaning: 1 ... 8			

Tab. 51 Number of parallel lines

Example „Single device“

- Number of devices in-line: 1
- Number of parallel lines: 1

Example „Two devices in parallel“

- Number of devices in-line: 1
- Number of parallel lines: 2

Example „Three devices in series“

- Number of devices in-line: 3
- Number of parallel lines: 1

5.2.1.3. Matrix Connection Type

Matrix connection type			
Address	**R/W**	**Type**	**Condition**
0x302A26	R/W	UINT16	Write (W) possible only on the master unit.

Possible values/ Meaning:

0: device groups connected in series are connected in parallel with each other.

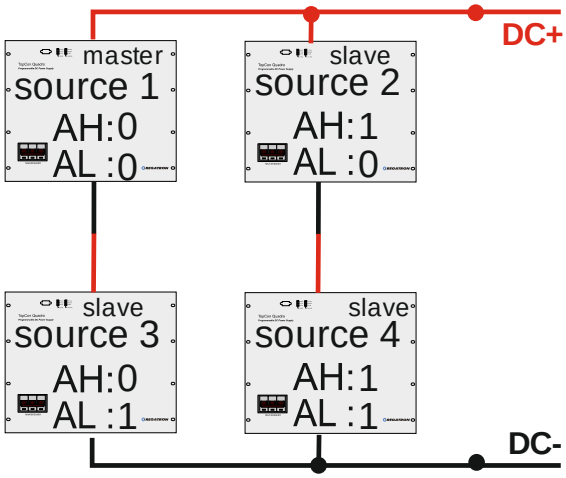

Number of devices in-line: 2
Number of parallel lines: 2
Matrix connection type: 0

1: device groups connected in parallel are connected in series with each other.

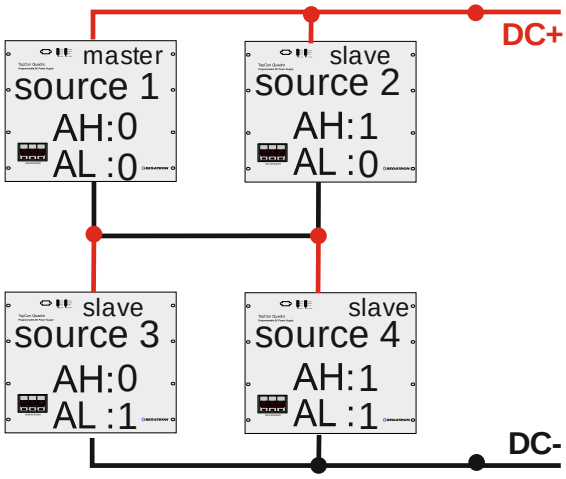

Number of devices in-line: 2
Number of parallel lines: 2
Matrix connection type: 1

Tab. 52 Matrix connection type

If this value is not set correctly the voltage and/or current symmetry between all modules may not be correct which can affect controller speed.

5.2.2. Multi-module system configuration TC.LIN

TC.LIN enable			
Address	**R/W**	**Type**	**Condition**
0x300800	R/W	UINT16	Write (W) possible only on the master unit.
Possible values/ Meaning: 0: disabled 1: enabled			

Tab. 53 TC.LIN enable

5.2.2.1. TC.LIN current range

TC.LIN current range			
Address	**R/W**	**Type**	**Condition**
0x300806	R/W	UINT16	Write (W) possible only on the master unit.
Possible values/ Meaning: 0: use local TC.LIN settings 1: use max current range (on all connected TC.LIN devices) 2: use alternative current range (on all connected TC.LIN devices)			

Tab. 54 TC.LIN current range

5.3. Controller parameters

The following table contains the addresses of the controller components in the TopCon master.

Write (W) possible only on the master unit.

5.3.1. Controller parameters Q1

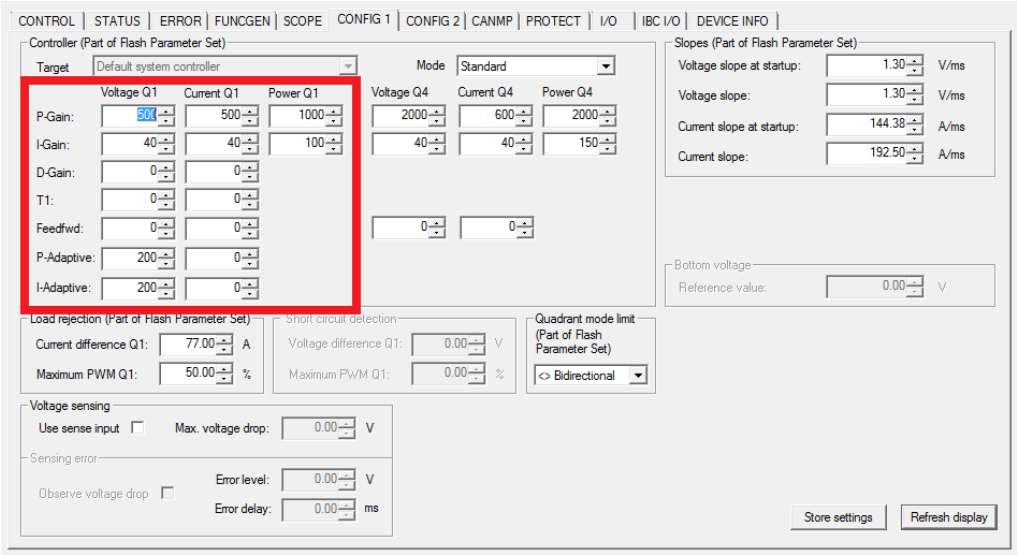

Fig. 9 Register CONFIG - Controller Parameters Q1

Item	Address Voltage Q1	Address Current Q1	Address Power Q1	R/W	Type
P-Gain	**0x005140**	**0x005143**	**0x005145**	R/W	SINT16
I-Gain	**0x005141**	**0x005144**	**0x005146**	R/W	SINT16
D-Gain	**0x005142**	**0x005153**	**---**	R/W	SINT16
T1	**0x005151**	**0x005152**	**---**	R/W	SINT16
Feedfwd	**0x00514C**	**0x00514D**	**---**	R/W	SINT16
P-adaptive	**0x00515D**	**0x00515F**	**---**	R/W	SINT16
I-adaptive	**0x00515E**	**0x005160**	**---**	R/W	SINT16

Tab. 55 Controller Parameters Q1

The range of all numbers of this table is: “positive integer”.

Additional controller parameters are available for the bidirectional TC.GSS devices/systems They offer additional controller parameters for the Q4 (feedback) path.

5.3.2. Controller parameters Q4

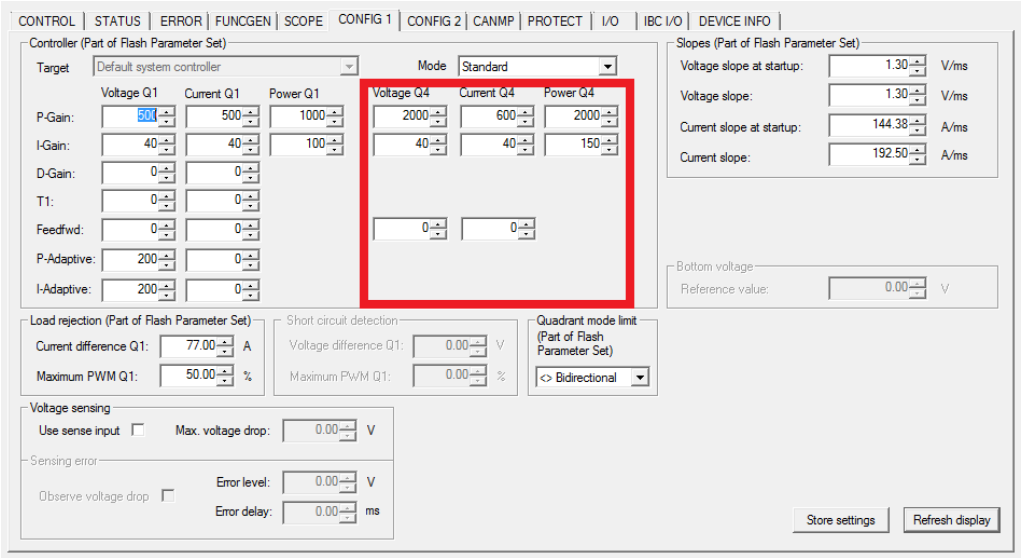

Fig. 10 Register CONTROL – Controller parameters Q4

Item	Addess Voltage Q4	Addess Current Q4	Address Power Q4	R/W	Type
P-Gain	**0x302514**	**0x302517**	**0x30251A**	R/W	SINT16
I-Gain	**0x302515**	**0x302518**	**0x30251B**	R/W	SINT16
D-Gain	**---**	**---**	**---**	R/W	---
T1	**---**	**---**	**---**	R/W	---
Feedfwd	**0x302516**	**0x302519**	**---**	R/W	SINT16
P-adaptive	**---**	**---**	**---**	R/W	---
I-adaptive	**---**	**---**	**---**	R/W	---

Tab. 56 Controller Parameters Q4

5.4. Load rejection

5.4.1. Current difference Q1

Current difference Q1			
Address	**R/W**	**Type**	**Condition**
0x005164	R/W	SINT16	Write (W) possible only on the master unit.
Possible values/ Meaning: 0 ... 4000_{10}: 4000_{10} ~ I_{max}			

Tab. 57 Current difference Q1

5.4.2. Maximum PWM Q1

Maximum PWM Q1			
Address	**R/W**	**Type**	**Condition**
0x005165	R/W	SINT16	Write (W) possible only on the master unit.
Possible values/ Meaning: 0 ... 4096_{10}: 4096_{10} ~ 100%			

Tab. 58 Maximum PWM Q1

5.5. Quadrant mode limit

LimitOutputToQ1Only			
Address	**R/W**	**Type**	**Condition**
0x30119C	R/W	UINT16	Only settable on the master unit
Possible values / meaning: 0: unlimited operation 1: operation limited to source mode (Q1)			

Tab. 59 LimitOutputToQ1Only

LimitOutputToQ4Only			
Address	**R/W**	**Type**	**Condition**
0x30119D	R/W	UINT16	If a quadrant is not available because of the device capabilities it is not possible to enable it here
Possible values / meaning: 0: unlimited operation 1: operation limited to sink mode (Q4)			

Tab. 60 LimitOutputToQ4Only

5.6. Filters

5.6.1. Analog inputs bandwidth

Analog inputs bandwidth			
Address	**R/W**	**Type**	**Condition**
0x0050C2	R/W	UINT16	Write (W) possible only on the master unit.
Possible values/ Meaning: Low pass filter 0 ... 15 0: no filter 1: 1600.0 Hz 2: 800.0 Hz 3: 400.0 Hz 4: 200.0 Hz 5: 100.0 Hz 6: 50.0 Hz 7: 25.0 Hz 8: 12.4 Hz 9: 6.2 Hz 10: 3.1 Hz 11: 1.6 Hz 12: 0.8 Hz 13: 0.4 Hz 14: 0.2 Hz 15: 0.1 Hz Other values will produce unpredictable results on the filtered values.			

Tab. 61 Analog inputs bandwidth

5.6.2. Analog outputs bandwidth

Analog outputs bandwidth			
Address	**R/W**	**Type**	**Condition**
0x0050C3	R/W	UINT16	Write (W) possible only on the master unit.
Possible values/ Meaning: Low pass filter 0 … 15 0: no filter 1: 1600.0 Hz 2: 800.0 Hz … 15: 0.1 Hz Other values will produce unpredictable results on the filtered values.			

Tab. 62 Analog outputs bandwidth

5.7. Slopes

The ramp only having an effect on the current-preset and power-preset value!

5.7.1. Voltage slope at startup

Voltage slope at startup			
Address	**R/W**	**Type**	**Condition**
0x005154	R/W	SINT16	Write (W) possible only on the master unit.
Possible values/ Meaning: 1 ... 32000_{10} 1600_{10}: 0 to 100% within 1ms, larger – steeper slope			

Tab. 63 Voltage slope at startup

5.7.2. Voltage slope

Voltage slope			
Address	**R/W**	**Type**	**Condition**
0x005156	R/W	SINT16	Write (W) possible only on the master unit.
Possible values/ Meaning: 1 ... 32000_{10} 1600_{10}: 0 to 100% within 1ms			

Tab. 64 Voltage slope

5.7.3. Current slope at startup

Voltage slope at startup			
Address	**R/W**	**Type**	**Condition**
0x005155	R/W	SINT16	Write (W) possible only on the master unit.
Possible values/ Meaning: 1 ... 32000_{10} 1600_{10}: 0 to 100% within 1ms			

Tab. 65 Current slope at startup

5.7.4. Current slope

Voltage slope			
Address	**R/W**	**Type**	**Condition**
0x005157	R/W	SINT16	Write (W) possible only on the master unit.
Possible values/ Meaning: 1 ... 32000_{10} 1600_{10}: 0 to 100% within 1ms			

Tab. 66 Current slope

5.8. Slave characteristics (Matrix configuration)

Not used on devices / systems with firmware V4.2x.

5.8.1. Allowed slave voltage error

Allowed slave voltage error			
Address	**R/W**	**Type**	**Condition**
0x005171	R/W	SINT16	Write (W) possible only on the master unit.
Possible values/ Meaning: -4000 ... 4000_{10}			

Tab. 67 Allowed slave voltage error

5.8.2. Allowed slave current error

Allowed slave current error			
Address	**R/W**	**Type**	**Condition**
0x005172	R/W	SINT16	Write (W) possible only on the master unit.
Possible values/ Meaning: -4000 ... 4000_{10}			

Tab. 68 Allowed slave current error

5.8.3. Turn off slave on no-load

Turn off slave on no-load			
Address	**R/W**	**Type**	**Condition**
0x00516E	R/W	UINT16	Write (W) possible only on the master unit.
Possible values/ Meaning: 0: disabled 1: enabled			

Tab. 69 Turn off slave on no-load

5.9. Voltage sensing

Voltage sensing is used if there are significant voltage losses (drop voltage) on the output wires. This is particularly the case when working with high current value.

In general voltage sensing is switched off and must be enabled – either from within TopControl or by using the enable command for the sense input.

Refer to the TopCon manual for proper cabling.

5.9.1. Enable sense input

Enable / disable sense input			
Address	**R/W**	**Type**	**Condition**
0x00528A	R/W	UINT16	Write (W) possible only on the master unit.
Possible values/ Meaning: 0: sensing disabled 1: sensing enabled			

Tab. 70 Enable voltage sensing

5.9.1.1. Read sense voltage (low-pass filtered)

Get actual sense voltage (filtered)			
Address	**R/W**	**Type**	**Condition**
0x0050D9	R	SINT16	none
Possible values/ Meaning: 0: 0 Volts 4000_{10}: full scale voltage			

Tab. 71 Read sense voltage

5.9.1.2. Read sense voltage (non-filtered)

Get actual sense voltage (non-filtered)			
Address	**R/W**	**Type**	**Condition**
0x00500E	R	SINT16	none
Possible values/ Meaning: 0: 0 Volts 4000_{10}: full scale voltage			

Tab. 72 Read sense voltage (non-filtered)

5.9.2. Max. voltage drop

Max. voltage drop			
Address	**R/W**	**Type**	**Condition**
0x005250	R/W	SINT16	Write (W) possible only on the master unit.
Possible values/ Meaning: 0 … 4000_{10}: 4000 ≙ nominal voltage			

Tab. 73 Max. voltage drop

5.9.3. Sensing error

5.9.3.1. Observe voltage drop (low active)

Observe voltage drop			
Address	**R/W**	**Type**	**Condition**
0x00528F	R/W	UINT16	Write (W) possible only on the master unit.
Possible values/ Meaning: 0: enabled 1: disabled			

Tab. 74 Observe voltage drop

5.9.3.2. Error level (Voltage drop)

Error level (Voltage drop)			
Address	**R/W**	**Type**	**Condition**
0x00528D	R/W	SINT16	Write (W) possible only on the master unit.
Possible values/ Meaning: 0 ... 4000_{10}: 4000 ≙ nominal voltage			

Tab. 75 Error level (Voltage drop)

5.9.3.3. Error delay (Voltage drop)

Error delay (Voltage drop)			
Address	**R/W**	**Type**	**Condition**
0x00528E	R/W	UINT16	Write (W) possible only on the master unit.
Possible values/ Meaning: 0 … 65535_{10} [50us]			

Tab. 76 Error delay (Voltage drop)

6. PROTECT functionality

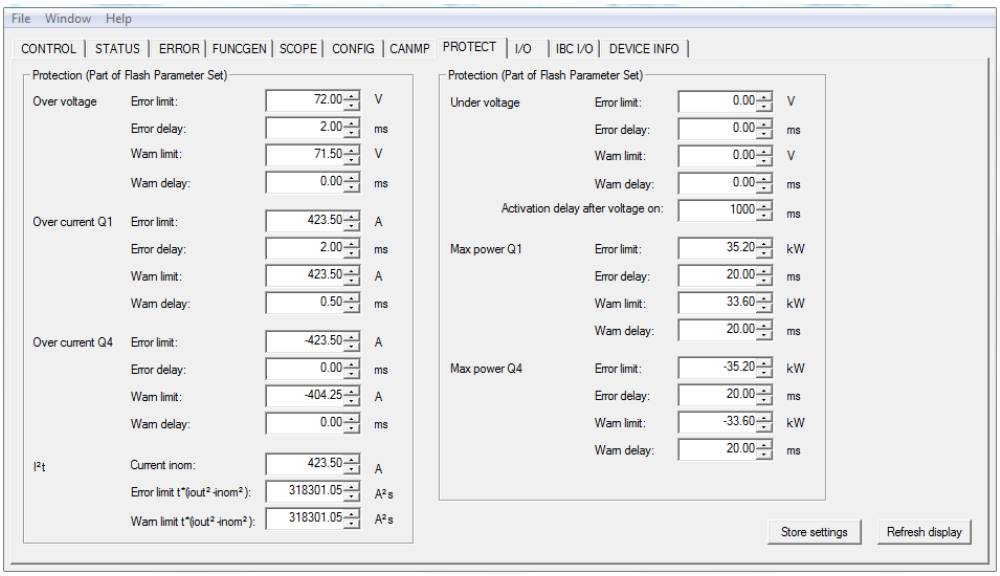

Fig. 11 Register PROTECT of TopControl

6.1. Over voltage, Over current Q1 / Q4 and I^2t

Group	Item	Address	R/W	Type	Value in
Over voltage	Error Limit	**0x0050CA**	R/W	SINT16	see 6.2.1
	Error Delay	**0x0050CB**	R/W	SINT16	[50µs]
	Warn Limit	**0x0050CE**	R/W	SINT16	see 6.2.1
	Warn Delay	**0x005232**	R/W	SINT16	[50µs]
Over current Q1	Error Limit	**0x0050C7**	R/W	SINT16	see 6.2.1
	Error Delay	**0x0050C8**	R/W	SINT16	[50µs]
	Warn Limit	**0x0050CD**	R/W	SINT16	see 6.2.1
	Warn Delay	**0x00521D**	R/W	SINT16	[50µs]
Over current Q4	Error Limit	**0x302A22**	R/W	SINT16	see 6.2.1
	Error Delay	**0x302A23**	R/W	SINT16	[50µs]
	Warn Limit	**0x302A24**	R/W	SINT16	see 6.2.1
	Warn Delay	**0x302A25**	R/W	SINT16	[50µs]
I^2t	Current I_{nom}	**0x0050C4**	R/W	UINT16	see 6.2.1
	Error Limit…	**0x0050C5**	R/W	UINT16	see 6.2.1
	Warn Limit…	**0x0050CF**	R/W	UINT16	see 6.2.1

Tab. 77 Overvoltage, Overcurrent and I^2t

6.2. Under voltage, Max.power Q1 and Max. power Q4

Group	Item	Address	R/W	Type	Value in
Under voltage	Error Limit	**0x302A31**	R/W	SINT16	see 6.2.1
	Error Delay	**0x302A32**	R/W	UINT16	[50µs]
	Warn Limit	**0x302A33**	R/W	SINT16	see 6.2.1
	Warn Delay	**0x302A34**	R/W	UINT16	[50µs]
	Activation delay after voltage on	**0x302A3D**	R/W	SINT16	[ms]
Max. power Q1	Error Limit	**0x302A35**	R/W	SINT16	see 6.2.1
	Error Delay	**0x302A36**	R/W	UINT16	[50µs]
	Warn Limit	**0x302A37**	R/W	SINT16	see 6.2.1
	Warn Delay	**0x302A38**	R/W	UINT16	[50µs]
Max. power Q4	Error Limit	**0x302A39**	R/W	SINT16	see 6.2.1
	Error Delay	**0x302A3A**	R/W	UINT16	[50µs]
	Warn Limit	**0x302A3B**	R/W	SINT16	see 6.2.1
	Warn Delay	**0x302A3C**	R/W	UINT16	[50µs]

Remarks

- “Delay time” in [50 µs] (conversion according to the example)
- Type SINT 16: Value range 0 … 1.6 s (0 … 32767)
- Type UINT 16: Value range 0 … 3.2 s (0 ... 65535)
- “Activation delay after voltage on” in [ms] (no conversion necessary)

Example

Conversion of the delay time:

Value = 10

Delay time = 10 * 50 µs = 0.5 ms

6.2.1. Conditions of all addresses

- Write (W) possible only on the master unit.
- These conditions are only valid for the limit values.

Master device Q1 Mode

0 ... 4400_{10} (4000_{10} + 10%)

4000 corresponds to system nominal output voltage or maximum output current.

Master device Q4 Mode

0 ... -4400_{10} (-4000_{10} - 10%)

4000 corresponds to system nominal output voltage or maximum output current.

Slave device Q1 Mode

0 ... 4400_{10} (4000_{10} + 10%)

4000 corresponds to module nominal output voltage or maximum output current.

Slave device Q4 Mode

0 ... -4400_{10} (-4000_{10} - 10%)

4000 corresponds to module nominal output voltage or maximum output current.

I^2t

For futher information, please contact our support.

7. Versatile Limit Switch (VLS) functionality

Please refer to the main TopCon manual for a general introduction to the VLS functionality. This documentation only describes the RS232 commands for using the TopCon VLS (Versatile Limit Switch) feature.

The VLS feature requires TopCon firmware V4.11.57 or later.

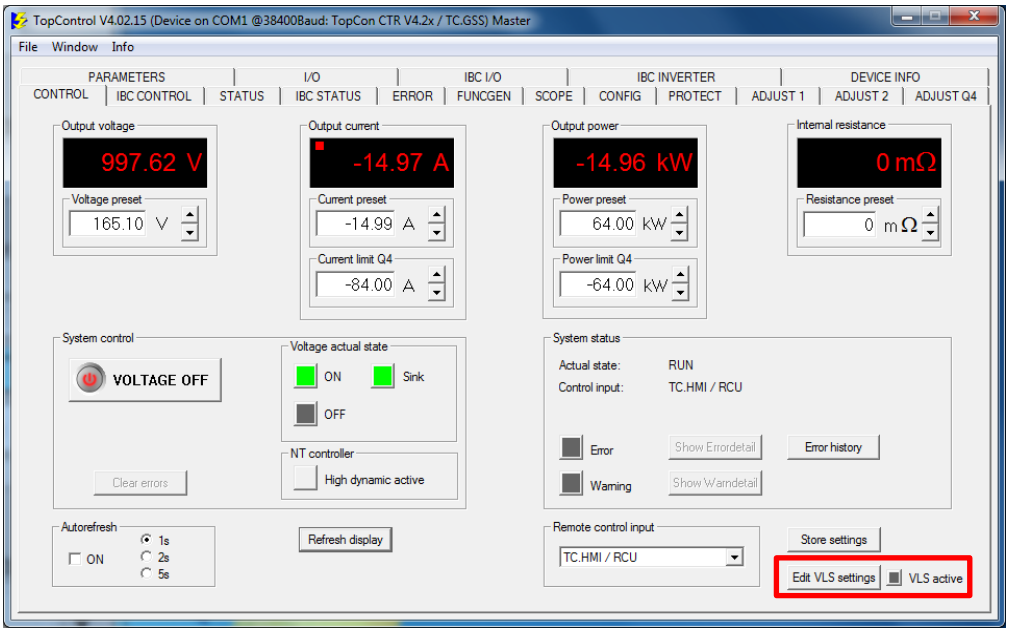

Fig. 12 Register CONTROL of TopControl

7.1. General settings

7.1.1. Input Selector

Input Selector			
Address	**R/W**	**Type**	**Condition**
0x004E00	R/W	UINT16	**RemoteControlInput** set to RS232. (see in chapter 3.1.1 on page 18)
Possible values / meaning: 0: VLS deactivated (Default) 1: VLS controlled by output voltage 2: VLS controlled by output current 3: VLS controlled by output power			

Tab. 78 Input selector

7.1.2. Function Selector

Function Selector			
Address	**R/W**	**Type**	**Condition**
0x004E01	R/W	UINT16	**RemoteControlInput** set to RS232. (see in chapter 3.1.1 on page 18)
Possible values / meaning: VLS output is active when output <voltage, current, power *> 0: exceeds upper limit 1: falls below lower limit 2: is inside window 3: is outside window * depending on Input Selector. (see in chapter 7.1.1 on page 54)			

Tab. 79 Function selector

7.2. Limits

7.2.1. Upper Limit

UpperLimit			
Address	**R/W**	**Type**	**Condition**
0x004E02	R/W	SINT16	**RemoteControlInput** set to RS232. (see in chapter 3.1.1 on page 18)
Possible values / meaning: 0 ... 4000_{10}: 4000 corresponds to system nominal output voltage, maximum output current or nominal output power, depending on Input Selector. (see in chapter 7.1.1 on page 54) -4000 … 0_{10}: Possible for TC.GSS devices / systems.			

Tab. 80 Upper Limit

7.2.2. Lower Limit

LowerLimit			
Address	**R/W**	**Type**	**Condition**
004E04h	R/W	SINT16	**RemoteControlInput** set to RS232. (see in chapter 3.1.1 on page 18)
Possible values / meaning: 0 ... 4000_{10}: 4000 corresponds to system nominal output voltage, maximum output current or nominal output power, depending on Input Selector. (see in chapter 7.1.1 on page 54) -4000 … 0_{10}: Possible for TC.GSS devices / systems.			

Tab. 81 Lower Limit

7.2.3. Upper Limit Hysteresis

UpperLimitHysteresis			
Address	**R/W**	**Type**	**Condition**
0x004E03	R/W	SINT16	**RemoteControlInput** set to RS232. (see in chapter 3.1.1 on page 18)
Possible values / meaning: -4000 ... 4000_{10}: 4000 corresponds to system nominal output voltage, maximum output current or nominal output power, depending on Input Selector. (see in chapter 7.1.1 on page 54)			

Tab. 82 Upper Limit Hysteresis

7.2.4. Lower Limit Hysteresis

LowerLimitHysteresis			
Address	**R/W**	**Type**	**Condition**
0x004E05	R/W	SINT16	**RemoteControlInput** set to RS232. (see in chapter 3.1.1 on page 18)
Possible values / meaning: -4000 ... 4000_{10}: 4000 corresponds to system nominal output voltage, maximum output current or nominal output power, depending on Input Selector. (see in chapter 7.1.1 on page 54)			

Tab. 83 Lower Limit Hysteresis

7.3. Relais switching behavior

7.3.1. Active To Inactive Delay

ActiveToInactiveDelay			
Address	**R/W**	**Type**	**Condition**
0x004E08 (high)	R/W	UINT16	**RemoteControlInput** set to RS232. (see in chapter 3.1.1 on page 18)
0x004E09 (low)	R/W	UINT16	**RemoteControlInput** set to RS232. (see in chapter 3.1.1 on page 18)
Possible values / meaning: 0 ... 72'000'000$_{10}$ = 0 … 3600s If the limit conditions are met for the given time then the VLS output is set to inactive. Delay time is measured in [50µs]. This is a 32Bit value. As only 16Bit can be written per Address, both addresses (high and low) have to be read / written. Example to write a 5s Delay: 5s = 100'000 [50µs] = **000186A0**$_{hex}$ Write 0x**0001** to the high address Write 0x**86A0** to the low address			

Tab. 84 Active to inactive delay

7.3.2. Inactive To Active Delay

InactiveToActiveDelay			
Address	**R/W**	**Type**	**Condition**
0x004E0A (high)	R/W	UINT16	**RemoteControlInput** set to RS232. (see in chapter 3.1.1 on page 18)
0x004E0B (low)	R/W	UINT16	**RemoteControlInput** set to RS232. (see in chapter 3.1.1 on page 18)
Possible values / meaning: 0 ... 72'000'000$_{10}$ = 0 … 3600s If the limit conditions are met for the given time then the VLS output is set to active. Delay time is measured in [50µs]. This is a 32Bit value. As only 16Bit can be written per Address, both addresses (high and low) have to be read / written. see example above.			

Tab. 85 Inactive to active delay

7.3.3. Output Selector

OutputSelector			
Address	**R/W**	**Type**	**Condition**
0x004E06	R/W	UINT16	**RemoteControlInput** set to RS232. (see in chapter 3.1.1 on page 18)
Possible values / meaning: Selects the output relais for VLS action: 0: WARN relais 1: RUN relais 2: OK/ALARM relais			

Tab. 86 Output selector

7.3.4. Invert Output Selector

InvertOutput			
Address	**R/W**	**Type**	**Condition**
0x004E07	R/W	UINT16	**RemoteControlInput** set to RS232. (see in chapter 3.1.1 on page 18)
Possible values / meaning: If the VLS output is active then the selected relais will 0: close 1: open			

Tab. 87 Invert Output selector

7.3.5. Max. Relais Switching Frequency

MaxRelaisSwitchingFrequency			
Address	**R/W**	**Type**	**Condition**
0x004E0C	R/W	UINT16	**RemoteControlInput** set to RS232. (see in chapter 3.1.1 on page 18)
Possible values / meaning: 0 ... 10_{10} This value should not be changed. It protects the relais from switching too often (eg. no hysteresis, no delay). Default value is set 2x per second.			

Tab. 88 Max. Relais Switching Frequency

8. TopCon Function Engine (TFE) functionality

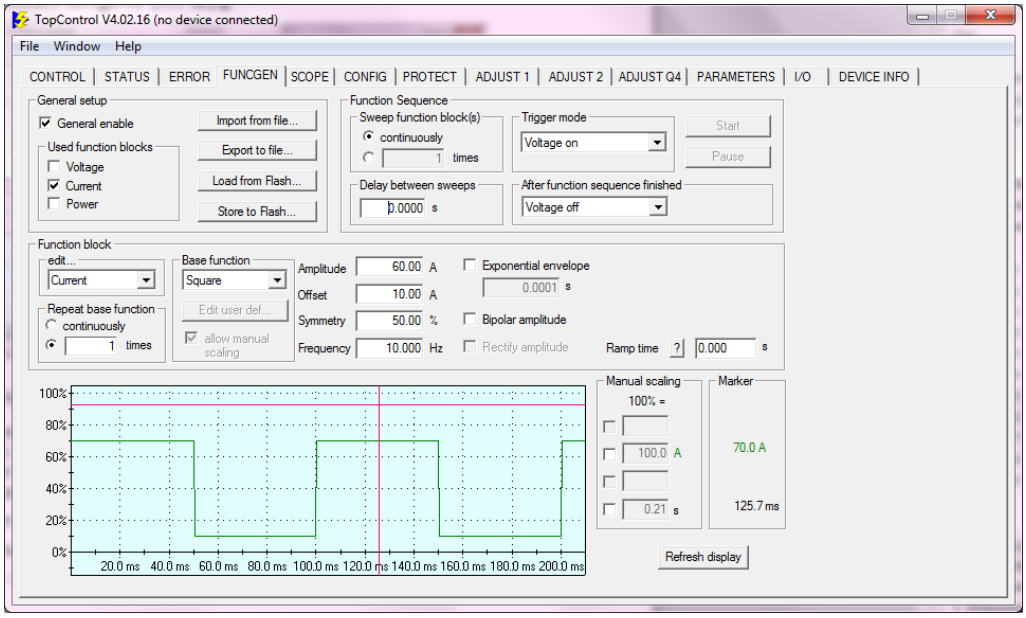

Fig. 13 Register FUNGEN of TopControl (TFE)

8.1. Enabling / Disabling the use of the function engine

There exist two different possibilities to enable / disable the operations of the TopCon Function Engine (TFE). One solution is a side effect of particular properties of each curve: The curve contains the “general enable” bit. The other solution is to directly set/reset the value in the address space of the TopCon.

Thus one can do either one or the other thing:

- Load a curve that has general enable bit set / reset
- Write a 1 (resp. 0) to the following address:

8.1.1. TFE General enable / disable

Set General enable/disable			
Address	**R/W**	**Type**	**Condition**
0x005CC7	W	UINT16	Set Voltage OFF prior to changing this value. Write (W) possible only on the master unit.
Possible values/ Meaning: Setting / resetting this bit enables/disables the work of the TFE. If Disabled, all other TFE settings are ignored and the TopCon power supply works in the same manner as if no TFE would be available.			

Tab. 89 TFE General enable / disable

8.2. Loading a curve (function sequence)

In order to load a function sequence which is stored on the firmware flash memory the following commands can be used.

First, write the Function Sequence number to load (n=1...999)

8.2.1. Write curve number to be used

Write curve number to be used			
Address	**R/W**	**Type**	**Condition**
0x005CDA	R/W	UINT16	Write (W) possible only on the master unit.
Possible values/ Meaning: Write here the number of the curve to be used.			

Tab. 90 Write curve number to be used

Then perform the Load command:

8.2.2. Execute load command

Execute previously LOAD command on selected curve			
Address	**R/W**	**Type**	**Condition**
0x005CDB	W	UINT16	Write (W) possible only on the master unit.
Possible values/ Meaning: Setting this register to 1 initiate the execution of the load command. (register is reset to 0 after starting the load command.)			

Tab. 91 Execute load command

As loading a function sequence might last a few 10 ms, the current status of the load command can be polled:

8.2.3. Read load command status

Execute previously LOAD command on selected curve			
Address	**R/W**	**Type**	**Condition**
0x005CDC	R	SINT16	none
Possible values/ Meaning: 1: Busy, load command not finished yet 0: Load command executed without errors -1: Internal timeout on loading -3: The requested Function Sequence does not exist			

Tab. 92 Read load command status

8.3. Start / Stop / Pause a curve (function sequence)

In order to start/stop/pause a Function Sequence use the following command. (TopCon has to be VoltageOn already)

Start / Stop / Pause / Continue execution of a curve			
Address	**R/W**	**Type**	**Condition**
0x005CE7	W	UINT16	Write (W) possible only on the master unit.
Possible values/ Meaning: Setting this register to the values indicated below executes the related command on the currently loaded curve. 1: stop the execution of a curve 2: start and continue (after pause) … 3: pause … 4: restart (complete curve) …			

Tab. 93 Start / Stop / Pause a curve

8.4. Ramp time

The ramp time is a global variable and is not linked to a specific curve.

The ramp time will be used on:

- amplitude modifications
- offset modifications
- AAP Input Scaling modifications
- Load of a new curve in the “Voltage ON” operation mode (Jump-free transition to the new curve within the ramp time)

8.4.1. Ramp time low

Ramp time low of a curve			
Address	**R/W**	**Type**	**Condition**
0x301CE8	R/W	UINT16	Write (W) possible only on the master unit. **RemoteControlInput** set to RS232. (see in chapter 3.1.1 on page 18)
The ramp time consists of a 32Bit word, low 16 bit stored at the above mentioned addresses. Possible values/ Meaning: 0 … 65535_{10} [50us]			

Tab. 94 Ramp time low of a curve

8.4.2. Ramp time high

Ramp time high of a curve			
Address	**R/W**	**Type**	**Condition**
0x301CE9	R/W	UINT16	Write (W) possible only on the master unit. **RemoteControlInput** set to RS232. (see in chapter 3.1.1 on page 18)
Possible values / meaning: The ramp time consists of a 32Bit word, high 16bit stored at the above mentioned addresses. Possible values/ Meaning: 0 … 65535_{10} [50us]			

Tab. 95 Ramp time high of a curve

Example

Ramp time = 10 s

Ramp time = 10 * 20’000 [50us] = 200’000

Share the value 200’000 on the two 16 bit addresses (low and high).

RampTimeHigh = RampTime / 65536 = 3,0517

Remove the decimal places of 3,0517 ≙ 3

RampTimeLow = RampTime % (Modulo) 65536 = 3392

RampTimeHigh = 200’000 / 65536 = **3**

RampTimeLow = 200’000 % (Modulo) 65536 = 3392 (residual value of the division)

9. Solar Array Simulation (SAS)

9.1. Scaling “Amplitude” & “InputScaling” of CUSTOM SASCurve

When working with CUSTOM SASCurves, it was asked for a possibility to modify the amplitude (= changes in Y-direction) and InputScaling (= changes in X-direction) values of the curve while using the LLP. The main reason for that was the implementation of a Java / Linux based software at a customer who did not want to use the API.

The following steps should enable the reader to change the “Amplitude” and the “InputScaling” of the CUSTOM SASCurve.

Make sure that the **FunctionBlockSelector** is set correctly and is executed at least once prior to the next commands so that they modify the current function block and not the block related with voltage or power.

General comments

These changes directly affect the currently active curve but do not change the curves in the flash.

Changing curves in the flash memory of the TopCon is not possible while using the Low-Level Protocol. If that functionality is needed, please refer to the TopCon support team for further assistance.

9.1.1. Set FunctionBlockSelector

Set FunctionBlockSelector			
Address	**R/W**	**Type**	**Condition**
0x005CF0	W	UINT16	Write (W) possible only on the master unit.
Possible values/ Meaning: 0: Voltage (not used for SASControl) 1: Current 2: Power (not used for SASControl) Write the value 1. This switches the active function block to “current” for the subsequent operations.			

Tab. 96 Set FunctionBlockSelector

9.1.2. Custom or Calculated Curve

Check if the actual curve is a custom curve and not a calculated curve. Calculated curves can not be changed by setting amplitude and input scaling.

Custom or Calculated Curve			
Address	**R/W**	**Type**	**Condition**
0x005D06	R	UINT16	**FunctionBlockSelector** set correctly.
Possible values/ Meaning: 0: Custom curve 1: Calculated curve			

Tab. 97 Custom or Calculated Curve

9.1.3. Changing “Amplitude”

The following procedure allows to change the afore mentioned values.

9.1.3.1. Set amplitude

Set amplitude			
Address	**R/W**	**Type**	**Condition**
0x005CF3	W	UINT16	**FunctionBlockSelector** set correctly. Write (W) possible only on the master unit.
Possible values/ Meaning: 0: 0 Amps 4000_{10}: Maximum value of the current amplitude of the device.			

Tab. 98 Set amplitude

9.1.4. Changing “InputScaling”

Changing the CUSTOM SASCurve in direction of the X axis:

9.1.4.1. InputScaling

InputScaling			
Address	**R/W**	**Type**	**Condition**
0x005D07	W	UINT16	**FunctionBlockSelector** set correctly. Write (W) possible only on the master unit.
Possible values/ Meaning: 0 … 32767_{10} The set value is to be calculated along the following formula: **4096 * (x0_orig / x0_scaled) with x0 = X – valueWhenCrossingYAxis** The formula allows to scale down to factor 0.126			

Tab. 99 InputScaling

10. Query of Error Group (firmware V4.1x and V4.2x)

"Warnings" alert for, "errors" indicate unwanted system states – e.g. if a value exceeds a certain given limit. Unlike warnings that only indicate a possible problem but not interfere with the power supply operations, errors immediately force the power supply to leave run mode and thus to switch power off.

All possible errors are defined by the **Standard Error Group – Overview, Extended Error Group - Overview** and **Error group**. In order to find the error cause the **Error Group - Overview** as well as the **Error group** have to be read. The **Error Group - Overview** shows which **Error group** register contains that particular error code. Such register based error handling allows to define a whole set of errors that might occur at the same time.

Calling “Clear Error” (see in chapter 3.2.2 on page 19) deletes the error memory and thus allows to switch power on again (if the error cause is not present anymore, otherwise the error is triggered immediately).

It is necessary to distinguish the different firmware versions:

- Firmware V4.1x: Standard error group 0 - F with 16 error flags each
- Firmware V4.2x: using the standard error group 0 – F of V4.1x **AND** the extended error group G – X with 16 error flags each.

Refer to chapter 3.8 on page 25 for reading out the firmware version information.

Refer to TopCon Main Manual or the TopCon Errorlist (the special excerpt on error handling) for an in-depth description and further information on the particular causes.

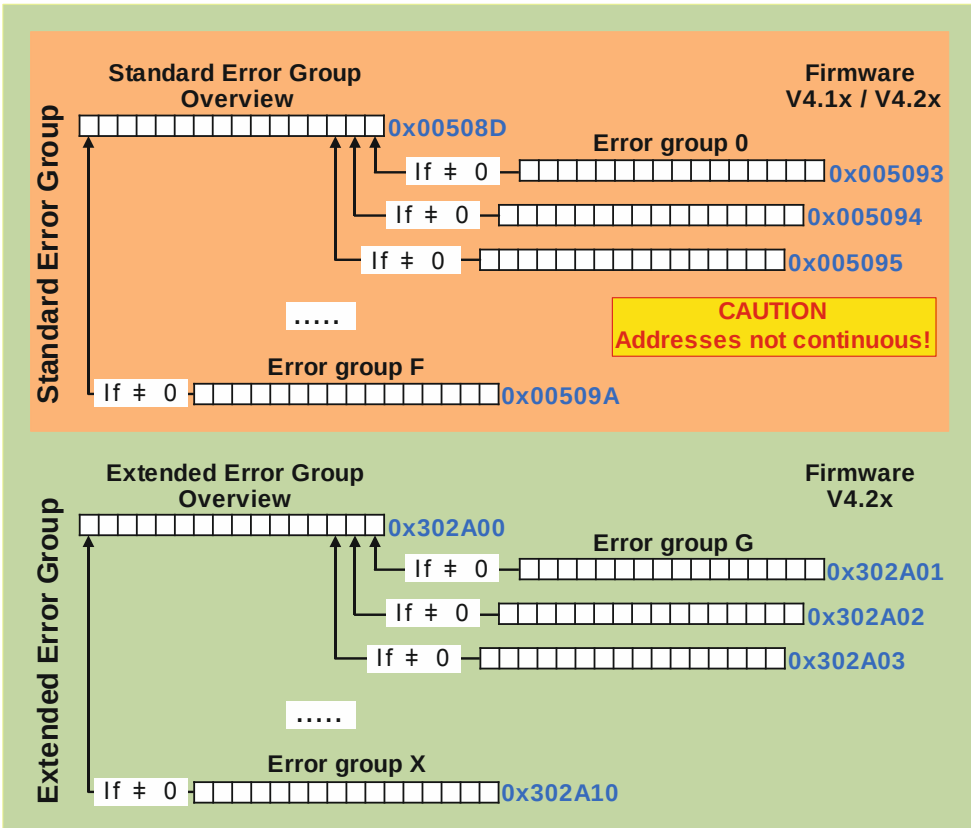

Fig. 14 Overview of error registers

Depending on the **ModuleSelectIndex** this query delivers the errors of the master unit, of a slave unit or of the whole system.

10.1. Query of Standard Error Group 0 - F

Standard Error Group - Overview			
Address	**R/W**	**Type**	**Condition**
0x00508D	R	UINT16	**ModuleSelectIndex** set correctly. (see in chapter 3.4 on page 21)
Possible values / meaning: Sum of all error groups (0x0000 … 0xFFFF)			

Tab. 100 Standard Error Group - Overview

Example of an error

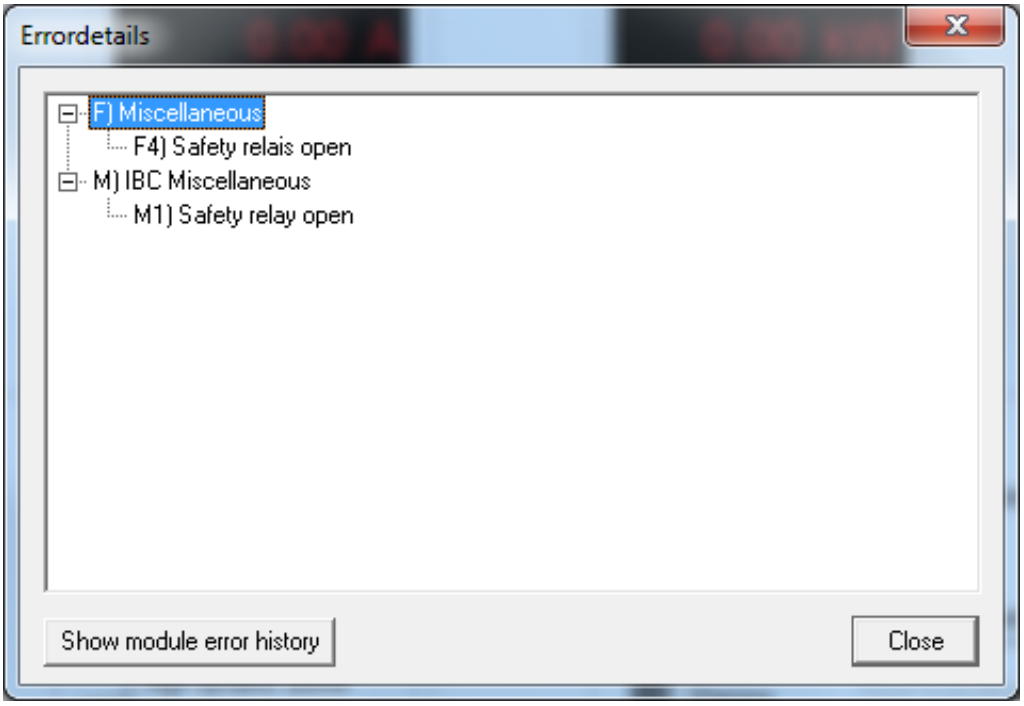

Fig. 15 Errordetails of TopControl

Error (Standard Error Group – Overview)

- F) Misellaneous

↳ Address 0x00508D

↳ 0x1000000000000000

Error group F

- F4) Safety relais open

↳ Address 0x00509A

- 0x0000000000001000

Overview of error registers

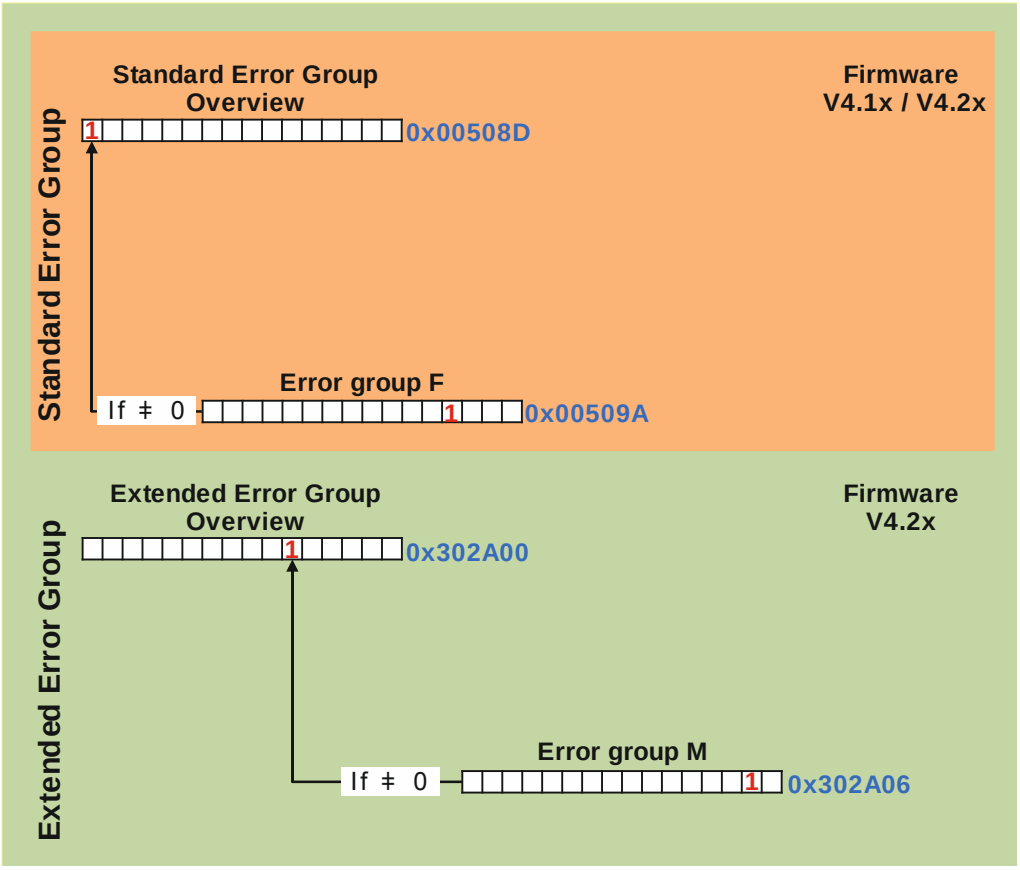

Fig. 16 Overview of error registers

Error (Extended Error Group - Overview)

- M) IBC Misellaneous

↳ Address 0x302A00

↳ 0x0000000000100000

Error group M

- M1) Safety relais open

↳ Address 0x302A06

- 0x0000000000000010

Errorlist

TopCon – Errors

Error group
Error group – F) Miscellaneous

2

2.3.16. F) Miscellaneous

Flash Code	Error	Error message TopCon (Long)	Description	Possible Cause	Counteraction
16-1	F0	Voltage sensing not allowed in series configuration	Enabling the sense functionality in the series operation is not allowed.	Enabling the sense functionality in the series operation is not allowed.	Disable the sense functionality
16-2	F1	Wrong option code	An invalid option code was set.	An invalid option code was set.	Reset the option code to all zero and restart the device; installed software options will *not* be removed by this. If necessary contact customer support.
16-3	F2	Interlock	Once the interlock circuit is opened, the power stage switches off.	The dummy plugs of the interfaces X105 and X101/X102 has not been wired properly.	Use the correct plugs for interface X101, X102 and X105.
16-3	F2	Interlock	Once the interlock circuit is opened, the power stage switches off.	The interlock circuit has not been wired properly (check TopCon manual for correct cabling).	Close the interlock circuit in a different way, e.g. relais contact, external emergency OFF signal).
16-3	F2	Interlock	Once the interlock circuit is opened, the power stage switches off.	Interlock circuit was opened by an external protection circuit.	Check the reason why the protection circuit was activated.
16-4	F3	External PWM shut-down	Switching off of the power stage was produced by an external signal.	This signal is not wired to the output. Thus only a very strong EMI interference is able to trigger this error.	Find the EMI sources e.g. contactors without free wheeling diodes.
16-5	F4	Safety relais open	The protection circuit relay is not closed.	External emergency off circuit or interlock cabling are interrupted.	Check the reason why the emergency off circuit or interlock are interrupted.
16-6	F5	Interlock=Lo missing	Attempt to switch VoltageON without having set interlock signal to 0-level.	Attempt to switch VoltageON without having set interlock signal to 0-level.	Ensure that the interlock signal is down to 0 level for at least 100ms prior to first voltageON signal. (ISR surveillance).
16-7	F6	Interlock closed but safety relay is open (interlock must be open too)	Clearing signal of Integrated Safety Relais (ISR) is on 0-level (emergency stop), but the interlock signal is not on 0-level	Clearing signal of Integrated Safety Relais (ISR) is on 0-level (emergency stop), but the interlock signal is not on 0-level	Ensure conjoint switching of ISR and Interlock (within 100ms)

REGATRON 2013-02-11 47 / 67 Error V11.00

Fig. 17 Document - TopCon Errorlist

According to this pattern all other error groups are built up.

Table 1 Shortlist of Standard Error Group 0 – F,
chapter 10.1.1 on page 70.

10.1.1. Shortlist of Standard Error Group 0 - F

Conditions of all addresses

- **ModuleSelectIndex** correctly set.
- For firmware V4.1x and V4.2x.

Standard Error Group 0 - F				
Error group	**Address**	**R/W**	**Type**	**Range**
0) Internal	**0x005093**	R	UINT16	0x0000 … 0xFFFF
1) Internal (PDSP)	**0x005094**	R	UINT16	0x0000 … 0xFFFF
2) Output current	**0x005095**	R	UINT16	0x0000 … 0xFFFF
3) Output voltage	**0x005096**	R	UINT16	0x0000 … 0xFFFF
4) Supply	**0x005097**	R	UINT16	0x0000 … 0xFFFF
5) Temperature	**0x005098**	R	UINT16	0x0000 … 0xFFFF
6) Communication	**0x005099**	R	UINT16	0x0000 … 0xFFFF
7) Internal (Modulator)	**0x0050A8**	R	UINT16	0x0000 … 0xFFFF
8) Internal (AD overrange 1)	**0x0050A9**	R	UINT16	0x0000 … 0xFFFF
9) Internal (AD overrange 2)	**0x0050AA**	R	UINT16	0x0000 … 0xFFFF
A) Internal (AD underrange1)	**0x0050AB**	R	UINT16	0x0000 … 0xFFFF
B) Internal (AD underrange 2)	**0x0050AC**	R	UINT16	0x0000 … 0xFFFF
C) Login	**0x0050AD**	R	UINT16	0x0000 … 0xFFFF
D) Configuration	**0x0050AE**	R	UINT16	0x0000 … 0xFFFF
E) Configuration 2	**0x0050AF**	R	UINT16	0x0000 … 0xFFFF
F) Miscellaneous	**0x00509A**	R	UNIT16	0x0000 … 0xFFFF

Table 1 Shortlist of Standard Error Group 0 – F

10.2. Query of Extended Error Group G - X

Similar to the error cause query for the standard error groups, in firmware V4.2x exists an extended error group with additional 16 error groups.

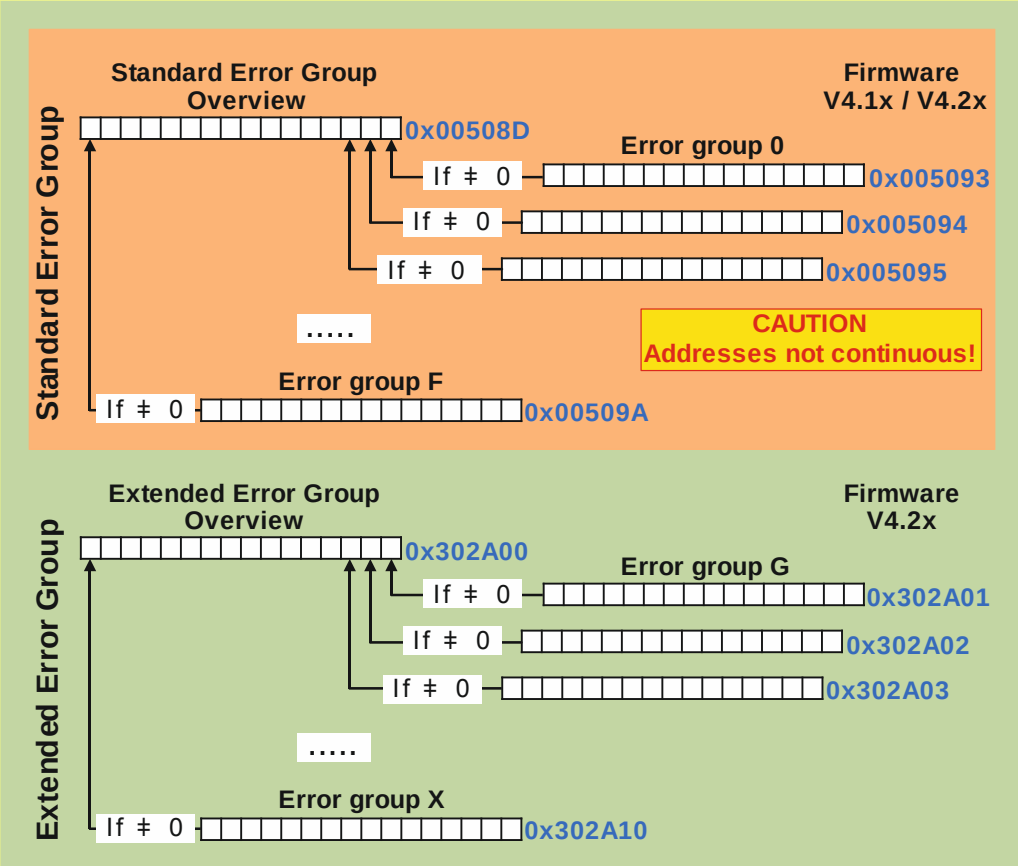

Fig. 18 Overview of error registers

Depending on the **ModuleSelectIndex** this query delivers the errors of the master unit, of a slave unit or of the whole system.

Extended Error Group - Overview			
Address	**R/W**	**Type**	**Condition**
0x302A00	R	UINT16	For firmware V4.2x only. **ModuleSelectIndex** set correctly. (see in chapter 3.4 on page 21)

Tab. 101 Extended Error Group - Overview

General description of the error groups, see in chapter 10 on page 66.

10.2.1. Shortlist of Extended Error Group G - X

Conditions of all addresses

- **ModuleSelectIndex** set correctly.
- For firmware V4.2x upwards.

Extended Error Group G - X				
Error group	**Address**	**R/W**	**Type**	**Range**
G) IBC System	**0x302A01**	R	UINT16	0x0000 … 0xFFFF
H) IBC Supply	**0x302A02**	R	UINT16	0x0000 … 0xFFFF
J) IBC Communication	**0x302A03**	R	UINT16	0x0000 … 0xFFFF
K) IBC Power	**0x302A04**	R	UINT16	0x0000 … 0xFFFF
L) IBC Inverter	**0x302A05**	R	UINT16	0x0000 … 0xFFFF
M) IBC Miscellaneous	**0x302A06**	R	UINT16	0x0000 … 0xFFFF
N) IBC Inverter 2	**0x302A07**	R	UINT16	0x0000 … 0xFFFF
P) not used	**0x302A08**	R	UINT16	0x0000 … 0xFFFF
Q) not used	**0x302A09**	R	UINT16	0x0000 … 0xFFFF
R) not used	**0x302A0A**	R	UINT16	0x0000 … 0xFFFF
S) Supply 2	**0x302A0B**	R	UINT16	0x0000 … 0xFFFF
T) Login 2	**0x302A0C**	R	UINT16	0x0000 … 0xFFFF
U) Configuration 3	**0x302A0D**	R	UINT16	0x0000 … 0xFFFF
V) Communication 3	**0x302A0E**	R	UINT16	0x0000 … 0xFFFF
W) Internal 2	**0x302A0F**	R	UINT16	0x0000 … 0xFFFF
X) Communication 2	**0x302A10**	R	UINT16	0x0000 … 0xFFFF

Table 2 Shortlist of Extended Error Group G - X

11. Query of Warning Group (firmware V4.1x and V4.2x)

Warnings are designed similar to errors. They are triggered by the same causes, but do not lead to error state that stops the output of energy (power off).
Just as the warning system, warnings are grouped into two main groups. The standard warning group (Standard Warning Group - Overview) are available in all firmware (V4.1x as well as V4.2x). The extended warning group (Extended Warning Group - Overview) is only available in TopCons with firmware V4.2x and upwards.

Depending on the **ModuleSelectIndex** this query delivers the warnings of the master unit, of a slave unit or of the whole system.

It is necessary to distinguish the different firmware versions:

- Firmware V4.1x: Standard Warning Group 0 - F with 16 error flags each.
- Firmware V4.2x: using Standard Warning Group 0 – F of V4.1x **AND** the Extended Warning Group G – X with 16 error flags each.

Refer to chapter 3.8 on page 25 for reading out the firmware version information.

Refer to TopCon Main Manual or the TopCon Errorlist (the special excerpt on error handling) for an in-depth description and further information on the particular causes.

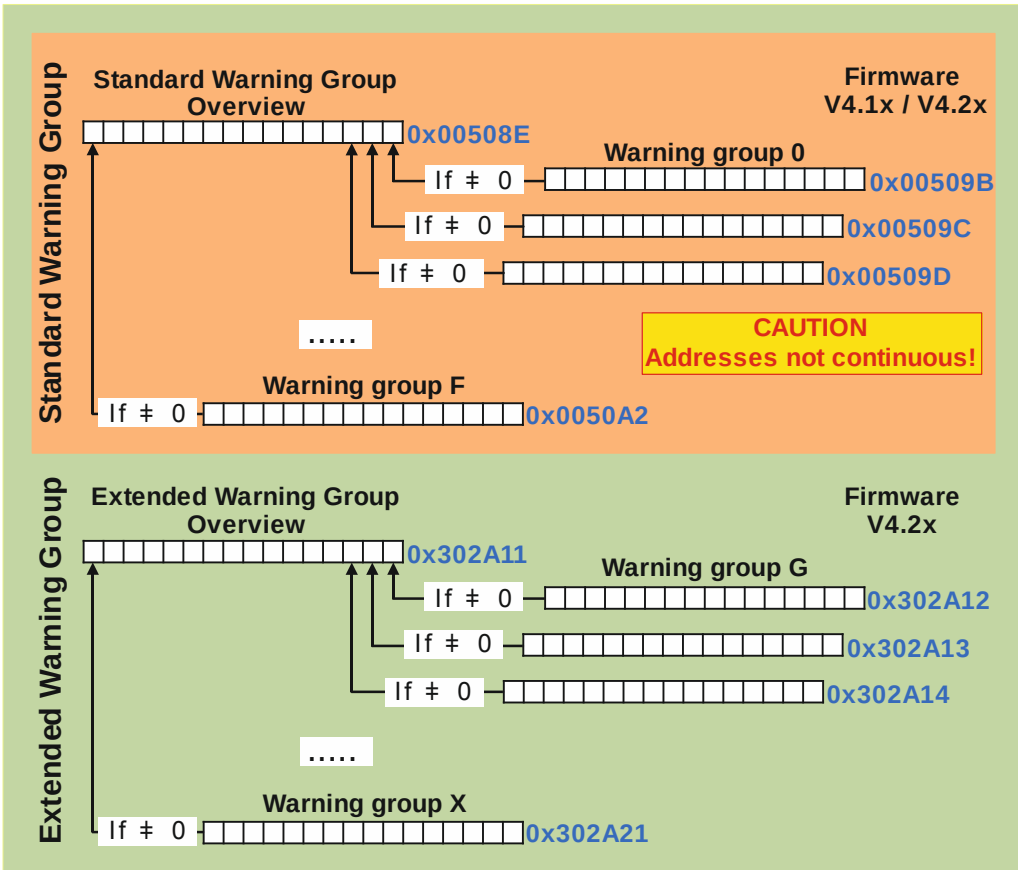

Fig. 19 Overview of warning registers

11.1. Query of Standard Warning Group 0 - F

Standard Warning Group - Overview			
Address	**R/W**	**Type**	**Condition**
0x00508E	R	UINT16	For firmware V4.1x and V4.2x. **ModuleSelectIndex** set correctly. (see in chapter 3.4 on page 21)
Possible values / meaning: Sum of all warning groups (0x0000 … 0xFFFF)			

Tab. 102 Standard Warning Group - Overview

11.1.1. Shortlist of Standard Warning Group 0 - F

Conditions of all addresses

- **ModuleSelectIndex** set correctly.
- For firmware V4.1x and V4.2x.

Standard Warning Group 0 - F				
Warning group	**Address**	**R/W**	**Type**	**Range**
0) Internal	**0x00509B**	R	UINT16	0x0000 … 0xFFFF
1) Internal (PDSP)	**0x00509C**	R	UINT16	0x0000 … 0xFFFF
2) Output current	**0x00509D**	R	UINT16	0x0000 … 0xFFFF
3) Output voltage	**0x00509E**	R	UINT16	0x0000 … 0xFFFF
4) Supply	**0x00509F**	R	UINT16	0x0000 … 0xFFFF
5) Temperature	**0x0050A0**	R	UINT16	0x0000 … 0xFFFF
6) Communication	**0x0050A1**	R	UINT16	0x0000 … 0xFFFF
7) Internal (Modulator)	**0x0050B0**	R	UINT16	0x0000 … 0xFFFF
8) Internal (AD overrange 1)	**0x0050B1**	R	UINT16	0x0000 … 0xFFFF
9) Internal (AD overrange 2)	**0x0050B2**	R	UINT16	0x0000 … 0xFFFF
A) Internal (AD underrange1)	**0x0050B3**	R	UINT16	0x0000 … 0xFFFF
B) Internal (AD underrange 2)	**0x0050B4**	R	UINT16	0x0000 … 0xFFFF
C) Login	**0x0050B5**	R	UINT16	0x0000 … 0xFFFF
D) Configuration	**0x0050B6**	R	UINT16	0x0000 … 0xFFFF
E) Configuration 2	**0x0050B7**	R	UINT16	0x0000 … 0xFFFF
F) Miscellaneous	**0x0050A2**	R	UINT16	0x0000 … 0xFFFF

Table 3 Shortlist of Standard Warning Group 0 - F

11.2. Query of Extended Warning Group G - X

This group of warnings is only available in the TopCons with a firmware V4.2x or upwards.

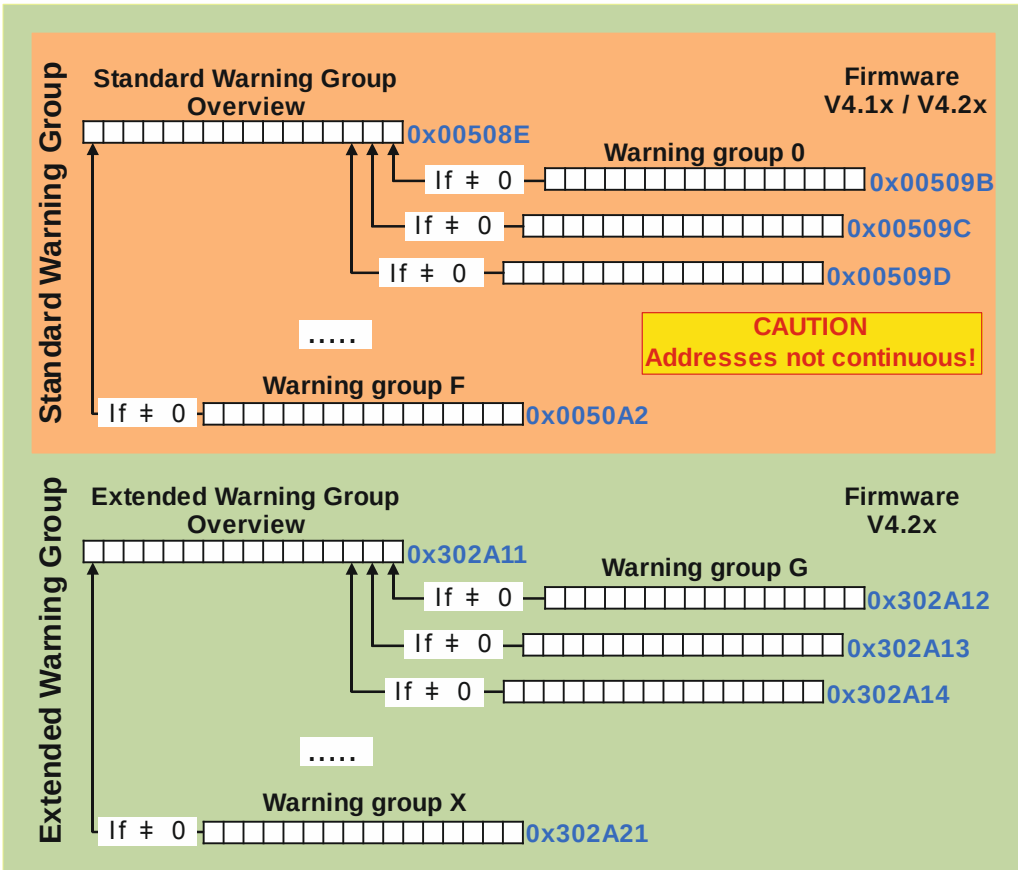

Fig. 20 Overview of warning registers

Extended Warning Group - Overview			
Address	**R/W**	**Type**	**Condition**
0x302A11	R	UINT16	For firmware V4.2x only. **ModuleSelectIndex** set correctly. (see in chapter 3.4 on page 21)

Tab. 103 Extended Warning Group - Overview

General description of the warning groups, see in chapter 11 on page 73.

11.2.1. Shortlist of Extended Warning Group G - X

Conditions of all addresses

- **ModuleSelectIndex** set correctly.
- For firmware V4.2x upwards.

Extended Warning Group G - X				
Warning groups	**Address**	**R/W**	**Type**	**Range**
G) IBC System	**0x302A12**	R	UINT16	0x0000 … 0xFFFF
H) IBC Supply	**0x302A13**	R	UINT16	0x0000 … 0xFFFF
J) IBC Communication	**0x302A14**	R	UINT16	0x0000 … 0xFFFF
K) IBC Power	**0x302A15**	R	UINT16	0x0000 … 0xFFFF
L) IBC Inverter	**0x302A16**	R	UINT16	0x0000 … 0xFFFF
M) IBC Miscellaneous	**0x302A17**	R	UINT16	0x0000 … 0xFFFF
N) IBC Inverter 2	**0x302A18**	R	UINT16	0x0000 … 0xFFFF
P) not used	**0x302A19**	R	UINT16	0x0000 … 0xFFFF
Q) not used	**0x302A1A**	R	UINT16	0x0000 … 0xFFFF
R) not used	**0x302A1B**	R	UINT16	0x0000 … 0xFFFF
S) Supply 2	**0x302A1C**	R	UINT16	0x0000 … 0xFFFF
T) Login 2	**0x302A1D**	R	UINT16	0x0000 … 0xFFFF
U) Configuration 3	**0x302A1E**	R	UINT16	0x0000 … 0xFFFF
V) Communication 3	**0x302A1F**	R	UINT16	0x0000 … 0xFFFF
W) Internal 2	**0x302A20**	R	UINT16	0x0000 … 0xFFFF
X) Communication 2	**0x302A21**	R	UINT16	0x0000 … 0xFFFF

Table 4 Shortlist of Extended Warning Group G - X